#99

DEPARTMENT OF THE ARMY TECHNICAL MANUAL

DEPARTMENT OF THE AIR FORCE MANUAL

TM 11-2203
AFM 102-2

8TH COMM. GROUP SCHOOL

TELETYPEWRITER SETS

AN/TGC-1

AND

AN/TGC-1A

3/12

31W4-2T-GC1-1

DEPARTMENTS OF THE ARMY AND THE AIR FORCE

MARCH 1949

TM 11–2203 — AFM 102–2

This manual supersedes TM 11–2203, 10 June 1944 and TB 11–2203–1, 16 August 1945

TELETYPEWRITER SETS

AN/TGC–1

AND

AN/TGC–1A

United States Government Printing Office
Washington : 1949

DEPARTMENTS OF THE ARMY AND
THE AIR FORCE
WASHINGTON 25, D. C., *10 March 1949*

TM 11–2203—AFM 102–2, Teletypewriter Sets AN/TGC–1 and AN/TGC–1A, is published for the information and guidance of all concerned.

[AG 300.7 (3 Jan 47)]

BY ORDER OF THE SECRETARIES OF THE ARMY AND THE AIR FORCE:

OFFICIAL:
EDWARD F. WITSELL
Major General
The Adjutant General

OMAR N. BRADLEY
Chief of Staff, United States Army

OFFICIAL:
L. L. JUDGE
Colonel, USAF
Air Adjutant General

HOYT S. VANDENBERG
Chief of Staff, United States Air Force

DISTRIBUTION:

Army:

Tech Sv (2); Arm & Sv Bd (1); AFF Bd (ea Sv Test Sec) (1); AFF (5); OS Maj Comd (5); Base Comd (3); MDW (5); A (ZI) (20), (Overseas) (5); CHQ (2); FC (2); USMA (2); Sch 11 (10); Gen Dep (10); Dep 11 (5) except Baltimore & Sacramento (20); Tng Ctr (2); PE (10); Lab 11 (2); 4th & 5th Ech Maint Shops 11 (2); T/O & E 11–47 (2); 11–107 (2); 11–127 (2); 11–587 (2); 11–592 (2); 11–597 (2); SPECIAL DISTRIBUTION.

Air Force:

Hq, USAF (25); USAF Maj Comd (5); USAF Sub Comds (3); Services (MATS) (2); All other Class III Installations (2). Overseas: Maj Air Comds (5); Numbered Air Forces (3); Overseas Air Bases (2). Special Distribution: Commandant, AF Technical School (Communications) Scott Air Force Base, Belleville, Ill. (10).

For explanation of distribution formula see TM 38–405.

Copyright Notice. This publication includes information contained in the following bulletins published by Teletype Corporation:

Bulletin 171, Issue 2, copyrights 1941 and 1944.
Bulletin 172, Issue 2, copyright 1941.
Bulletin 185, Issue 1, copyright 1944.
Bulletin 1100, Issue 2, copyright 1944.
Bulletin 1122, Issue 2, copyrights 1941 and 1944.

CONTENTS

		Paragraph	Page
PART ONE. INTRODUCTION.			
Section I.	Description	1–5	1
II.	Application	6–16	7
III.	Assembly, installation, and disassembly	17–23	18
PART TWO. OPERATING INSTRUCTIONS.			
Section IV.	Equipment connections	24–32	29
V.	Operating checks and adjustments	33–40	34
VI.	Operation	41–55	36
VII.	Routine checks of performance	56–62	42
PART THREE. PREVENTIVE MAINTENANCE.			
Section VIII.	Preventive maintenance techniques	63–79	50
IX.	Preventive maintenance check list	80–81	58
X.	Lubrication	82–88	59
XI.	Weatherproofing of equipment	89–92	70
PART FOUR. AUXILIARY EQUIPMENT. (Not used.)			
PART FIVE. REPAIR INSTRUCTIONS.			
Section XII.	General repair procedure	93–94	77
XIII.	Detailed functioning of equipment	95–126	77
XIV.	Test equipment	127–134	103
XV.	Trouble shooting	135–145	109
XVI.	Repair	146–160	115
XVII.	Requirements and adjustments	161–220	124
APPENDIX I.	**REFERENCES, ABBREVIATIONS, AND GLOSSARY**		141
II.	**PARTS IDENTIFICATION LISTS AND TABLES OF REPLACEABLE PARTS**		144
INDEX			203

DESTRUCTION NOTICE

WHY —To prevent the enemy from using or salvaging this equipment for his benefit.

WHEN—When ordered by your commander.

HOW —1. Smash—Use sledges, axes, handaxes, pickaxes, hammers, crowbars, heavy tools.

2. Cut—Use axes, handaxes, machetes.
3. Burn—Use gasoline, kerosene, oil, flame throwers, incendiary grenades.
4. Explosives—Use firearms, grenades, TNT.
5. Disposal—Bury in slit trenches, fox holes, other holes. Throw in streams. Scatter.

USE ANYTHING IMMEDIATELY AVAILABLE FOR DESTRUCTION OF THIS EQUIPMENT

WHAT—1. Smash—Signal indicator panel, typing reperforators, multiple transmitter distributor and base, tape winder and motor, rectifier, power cabinet, equipment drawer, and console.

2. Cut—All power and signal cords and wiring.
3. Burn—Technical manuals, records, and perforated tapes.
4. Bury or scatter—Any or all of the above pieces after smashing, breaking, and burning.

DESTROY EVERYTHING

SAFETY NOTICE

Voltages used in this equipment are high enough to endanger human life and may be fatal if contacted by operating personnel. Operators must be careful not to contact the power supply while checking or servicing the equipment. *Be sure that the power is off before touching terminals and conductors with bare hands.* All test leads should be insulated.

First Aid for Electric Shock

RESCUE.

In case of electric shock, shut off the high voltage at once and ground the circuits. If the high voltage cannot be turned off without delay, free the victim from contact with the live conductor as promptly as possible. Avoid direct contact with either the live conductor or the victim's body. Use a dry board, dry clothing, or other nonconductor to free the victim. An ax may be used to cut the high-voltage wire. Use extreme caution to avoid the resulting electric flash.

SYMPTOMS.

a. Breathing stops abruptly in electric shock if the current passes through the breathing center at the base of the brain. If the shock has not been too severe, the breath center recovers after a while and normal breathing is resumed, provided that a sufficient supply of air has been furnished meanwhile by artificial respiration.

b. The victim is usually very white or blue. The pulse is very weak or entirely absent and unconsciousness is complete. Burns are usually present. The victim's body may become rigid or stiff in a very few minutes. This condition is due to the action of electricity and is not to be considered rigor mortis. Artificial respiration must still be given, as several such cases are reported to have recovered. The ordinary and general tests for death should never be accepted.

TREATMENT.

a. Start artificial respiration immediately. At the same time send for a medical officer, if assistance is available. Do not leave the victim unattended. Perform artificial respiration at the scene of the accident, unless the victim's or operator's life is endangered from such action. *In this case only*, remove the victim to another location, but no farther than is necessary for safety. If the new location is more than a few feet away, artificial respiration should be given while the victim is being moved. If the method of transportation prohibits the use of the Shaeffer prone pressure method, other methods of resuscitation may be used. Pressure may be exerted on the front of the victim's diaphragm, or the direct mouth-to-mouth method may be used. Artificial respiration, once started, must be continued, without loss of rhythm.

b. Lay the victim in a prone position, one arm extended directly overhead, and the other arm bent at the elbow so that the back of the hand supports the head. The face should be turned away from the bent elbow so that the nose and mouth are free for breathing.

c. Open the victim's mouth and remove any foreign bodies, such as false teeth, chewing gum, or tobacco. The mouth should remain open, with the tongue extended. Do not permit the victim to draw his tongue back into his mouth or throat.

d. If an assistant is available during resuscitation, he should loosen any tight clothing to permit free circulation of blood and to prevent restriction of breathing. He should see that the victim is kept warm, by applying blankets or other covering, or by applying hot rocks or bricks wrapped in cloth or paper to prevent injury to the victim. The assistant should also be ever watchful to see that the victim does not swallow his tongue. He should continually wipe from the victim's mouth any frothy mucus or saliva that may collect and interfere with respiration.

e. The resuscitating operator should straddle the victim's thighs, or one leg, in such manner that:

(*1*) the operator's arms and thighs will be vertical while applying pressure on the small of the victim's back;

(*2*) the operator's fingers are in a natural position on the victim's back with the little finger lying on the last rib;

(*3*) the heels of the hands rest on either side of the spine as far apart as convenient without allowing the hands to slip off the victim;

(*4*) the operator's elbows are straight and locked.

f. The resuscitation procedure is as follows:

(*1*) Exert downward pressure, not exceeding 60 pounds, for 1 second.

(*2*) Swing back, suddenly releasing pressure, and sit on the heels.

(*3*) After 2 seconds rest, swing forward again, positioning the hands exactly as before, and apply pressure for another second.

g. The forward swing, positioning of the hands, and the downward pressure should be accomplished in one continuous motion, which requires 1 second. The release and backward swing require 1 second. The addition of the 2-second rest makes a total of 4

TL15338-D

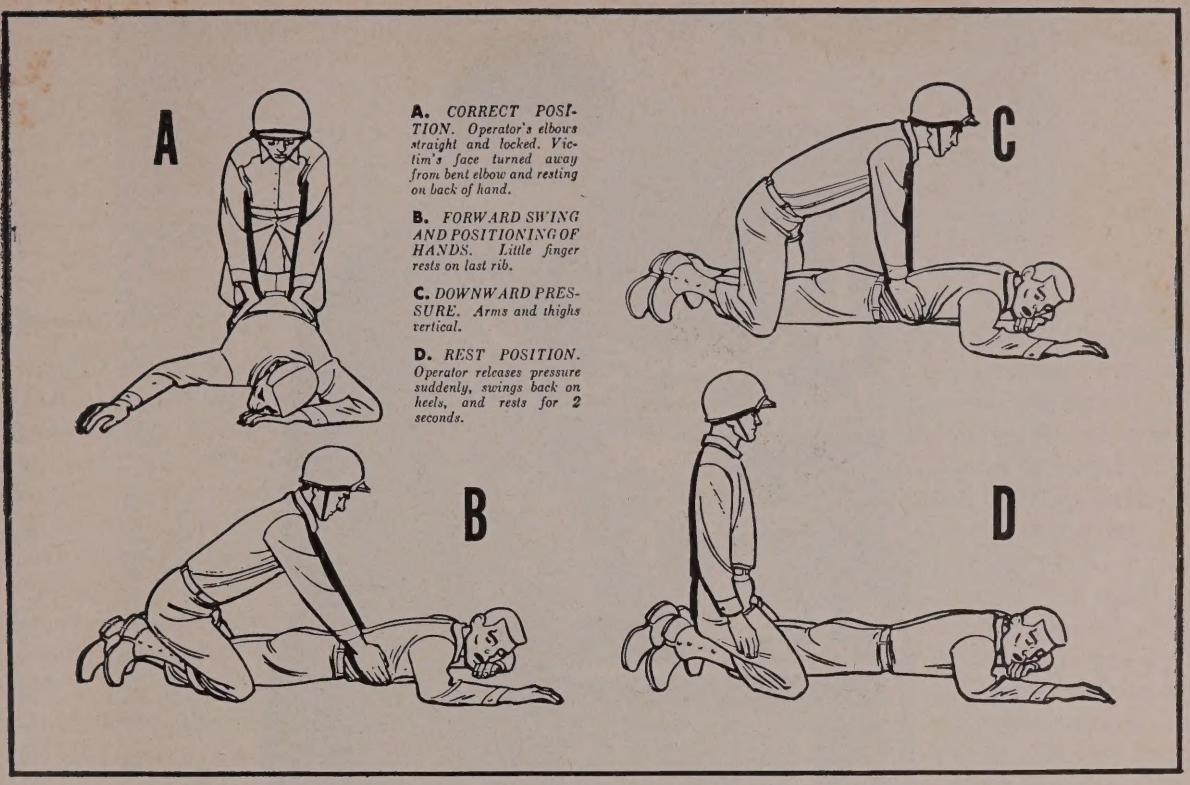
A
B
C
D
A. CORRECT POSITION. Operator's elbows straight and locked. Victim's face turned away from bent elbow and resting on back of hand.
B. FORWARD SWING AND POSITIONING OF HANDS. Little finger rests on last rib.
C. DOWNWARD PRESSURE. Arms and thighs vertical.
D. REST POSITION. Operator releases pressure suddenly, swings back on heels, and rests for 2 seconds.

seconds for a complete cycle. Until the operator is thoroughly familiar with the correct cadence of the cycle, he should count the seconds aloud, speaking distinctly and counting evenly in thousands. Example: one thousand and one, one thousand and two, etc.

h. Artificial respiration should be continued until the victim regains normal breathing or is pronounced dead by a medical officer. Since it may be necessary to continue resuscitation for several hours, relief operators should be used if available.

RELIEVING OPERATOR.

The relief operator kneels beside the operator and follows him through several complete cycles. When the relief operator is sure he has the correct rhythm, he places his hands on the operator's hands without applying pressure. This indicates that he is ready to take over. On the backward swing, the operator moves and the relief operator takes his position. The relieved operator follows through several complete cycles to be sure that the new operator has the correct rhythm. He remains alert to take over instantly if the new operator falters or hesitates on the cycle.

STIMULANTS.

a. If an inhalant stimulant is used, such as aromatic spirits of ammonia, the individual administering the stimulant should first test it himself to see how close he can hold the inhalant to his own nostril for comfortable breathing. Be sure that the inhalant is not held any closer to the victim's nostrils, and then for only 1 or 2 seconds every minute.

b. After the victim has regained consciousness, he may be given hot coffee, hot tea, or a glass of water containing ½ teaspoon of aromatic spirits of ammonia. *Do not give any liquids to an unconscious victim.*

CAUTIONS.

a. After the victim revives, keep him LYING QUIETLY. Any injury a person may have received may cause a condition of shock. Shock is present if the victim is pale and has a cold sweat, his pulse is weak and rapid, and his breathing is short and gasping.

b. Keep the victim lying flat on his back, with his head lower than the rest of his body and his hips elevated. Be sure that there is no tight clothing to restrict the free circulation of blood or hinder natural breathing. Keep him warm and quiet.

c. A resuscitated victim must be watched carefully as he may suddenly stop breathing. *Never leave a resuscitated person alone until it is CERTAIN that he is fully conscious and breathing normally.*

TL15338-E

Figure 1. Teletypewriter Set AN/TGC–1 or AN/TGC–1A, front view

This manual supersedes TM 11–2203, 10 June 1944 and TB 11–2203–1, 16 August 1945

PART ONE
INTRODUCTION

Section I. DESCRIPTION

1. General

a. Teletypewriter Sets AN/TGC–1 and AN/TGC–1A are complete teletypewriter sets designed for use in comcenters (communications center) and tape-relay stations. Each unit includes facilities for sending, receiving, and monitoring teletype messages on perforated tape on which the message also is typed. Sending, receiving, and monitoring facilities are furnished by a multiple transmitter distributor (for sending) and two typing reperforators (for receiving and monitoring).

b. Both Teletypewriter Sets AN/TGC–1 and AN/TGC–1A function at 368.1 operations per minute (o. p. m.) (60 words per minute). To have Teletypewriter Set AN/TGC–1A function at 600 o. p. m. (100 words per minute) it is necessary to make certain mechanical changes. These changes are described in paragraph 159*c*. To have Teletypewriter Set AN/TGC–1 function at 600 o. p. m. it is necessary to make both mechanical and electrical changes. These changes are described in paragraph 159. It will be noted that once the electrical changes are made to the AN/TGC–1 they need not be made again and only the mechanical changes should be performed in changing from 60 words per minute to 100 words per minute or back again. In effect, by making the electrical changes to Teletypewriter Set AN/TGC–1, it becomes Teletypewriter Set AN/TGC–1A.

c. The multiple transmitter distributor provides one number transmitter and two message transmitters arranged to provide continuous transmission. Perforated tape received at the comcenter over other teletypewriter equipment, such as Teletypewriter Sets TC–16, is inserted manually in the units of the transmitter distributor for retransmission to another comcenter or tape-relay station.

d. The two typing reperforators furnish a copy of received or transmitted messages on perforated tape on which the message also is typed. Messages received on Teletypewriter Sets AN/TGC–1 and AN/TGC–1A may be relayed to other stations by tearing the received tape as necessary and manually feeding the separate message tapes into other tape-transmitting teletypewriter equipment. Perforated tape from both the receiving and monitoring typing reperforators may be converted to page-printed copy by transmission through a room circuit to a page-printing teletypewriter set.

e. Teletypewriter Sets AN/TGC–1 and AN/TGC–1A may be used singly in a small comcenter where a few teletypewriter lines terminate, or a number of the sets may be set up side-by-side to provide facilities for handling traffic in large comcenters where many teletypewriter lines terminate. These teletypewriters provide a means for relaying messages in printed reperforated tape form to the station called for in the message heading, without having to stop the tape and repunch all or any part of the message at each relay station. Because of the continuous transmission feature of Teletypewriter Sets AN/TGC–1 and AN/TGC–1A, line time may be conserved by the use of this equipment.

f. Teletypewriter Sets AN/TGC–1 and AN/TGC–1A are electrically and mechanically similar, the only differences being those incident to increasing the speed of operation. Throughout this manual the terminology AN/TGC–1 and AN/TGC–1A will be used in referring to Teletypewriter Set AN/TGC–1 and to Teletypewriter Set AN/TGC–1A.

g. AN/TGC–1 and AN/TGC–1A provide facilities for operating under various circuit conditions. With appropriate wiring and switch changes, AN/TGC–1 and AN/TGC–1A may be operated neutral over one or two half-duplex (single) circuits and neutral or polar over one or two full-duplex circuits. Operation over one full duplex circuit (two external circuits, each consisting of two wires or single wire with ground return) or one half-duplex (single) circuit is designated NORMAL and operation over two full-

duplex circuits (four external circuits) or two half-duplex (single) circuits is designated SPLIT.

h. Power for the multiple transmitter distributor or both the AN/TGC–1 and AN/TGC–1A is furnished in each case by series-governed motors adapted for 110-volt a-c or d-c operation. Note, however, that the power for the typing reperforator of the AN/TGC–1 is furnished by a synchronous motor adapted for 60-cycle, 110-volt a-c operation while the typing reperforator of the AN/TGC–1A receives its power from a series-governed motor adapted for 110 volt a-c or d-c operation. Since the synchronous motors function only on a-c, they are being replaced as a source of power for the typing reperforator for the AN/TGC–1 by series-governed motors which will permit either a-c or d-c operation. AN/TGC–1 (and AN/TGC–1A) contains a rectifier for providing a source of d-c (signaling battery) when the external power source is a-c. The present issue of tape-winder motors is a series motor, adapted for 110-volt a-c or d-c operation. As these motors are replaced, an induction-type motor will be furnished. It operates from a 115-volt, 60-cycle a-c source.

i. This technical manual furnishes detailed information on the maintenance and operation of AN/TGC–1 and AN/TGC–1A.

j. Throughout this manual reference is made to technical manuals which provide detailed information on installation, operation, and maintenance of typing reperforators (TM 11–2223) and of test sets and teletypewriter equipment with which AN/TGC–1 and AN/TGC–1A commonly are used. The technical manuals which normally will be used as references with these teletypewriters are listed in appendix I.

2. Table of Components

Listed below are components of Teletypewriter Sets AN/TGC–1 and AN/TGC–1A. Data are given for the equipment unpacked and ready for use. (See par. 5 for weights, dimensions, and volumes of the shipping containers used for packaging various components for export or domestic shipment.)

Quantity	Component	Approx. weight (lb.)	Width (in.)	Length (in.)	Height (in.)
1	Cabinet, console-type	250	24	24	65
2	Typing reperforator, with motor	34¼	13	12	8½
1	Multiple transmitter distributor and base, with motor	90	15¼	16¾	5¾
1	Tape winder, with motor	10	12	6	11
1	54A rectifier	35	5	15¾	6¾
1	Signal indicator panel	20	5	21	1¾

3. Description of Teletypewriter Sets AN/TGC–1 and AN/TGC–1A

Teletypewriter Set AN/TGC–1 (or AN/TGC–1A) is housed in a metal console approximately 65 inches high, 24 inches wide, and 24 inches deep. Starting from the top and approximately in the order in which they are placed in the console, the following major items of equipment are contained in teletypewriters AN/TGC–1 and AN/TGC–1A (figs. 2, 3, and 4) : Signal indicator panel, monitor (upper) typing reperforator, motor-driven tape winder, receiving (lower) typing reperforator, rectifier, power panels, multiple transmitter distributor, number-tape reel, tape compartments, line terminal strips, equipment drawer (containing the switches, resistor panel, and relay panel), and power cabinet.

a. Signal Indicator Panel. The signal indicator panel located at the top of the console contains the alarm lamp, number release key, release key, break key, tape feed-out keys, and alarm switch. The signal indicator panel is housed in a demountable panel which is electrically connected to the console by means of a plug and socket.

b. Monitor (Upper) Typing Reperforator. The monitor typing reperforator and its motor are located below the signal indicator panel in a compartment which is mounted on roller slides so that the compartment may be pulled forward when it is necessary to inspect the typing reperforator or the tape winder (*c* below). Except when wired for SPLIT operation, the monitor typing reperforator provides a copy of all messages transmitted by the teletypewriter sets. (For detailed information on the typing reperforator, see TM 11–2223.)

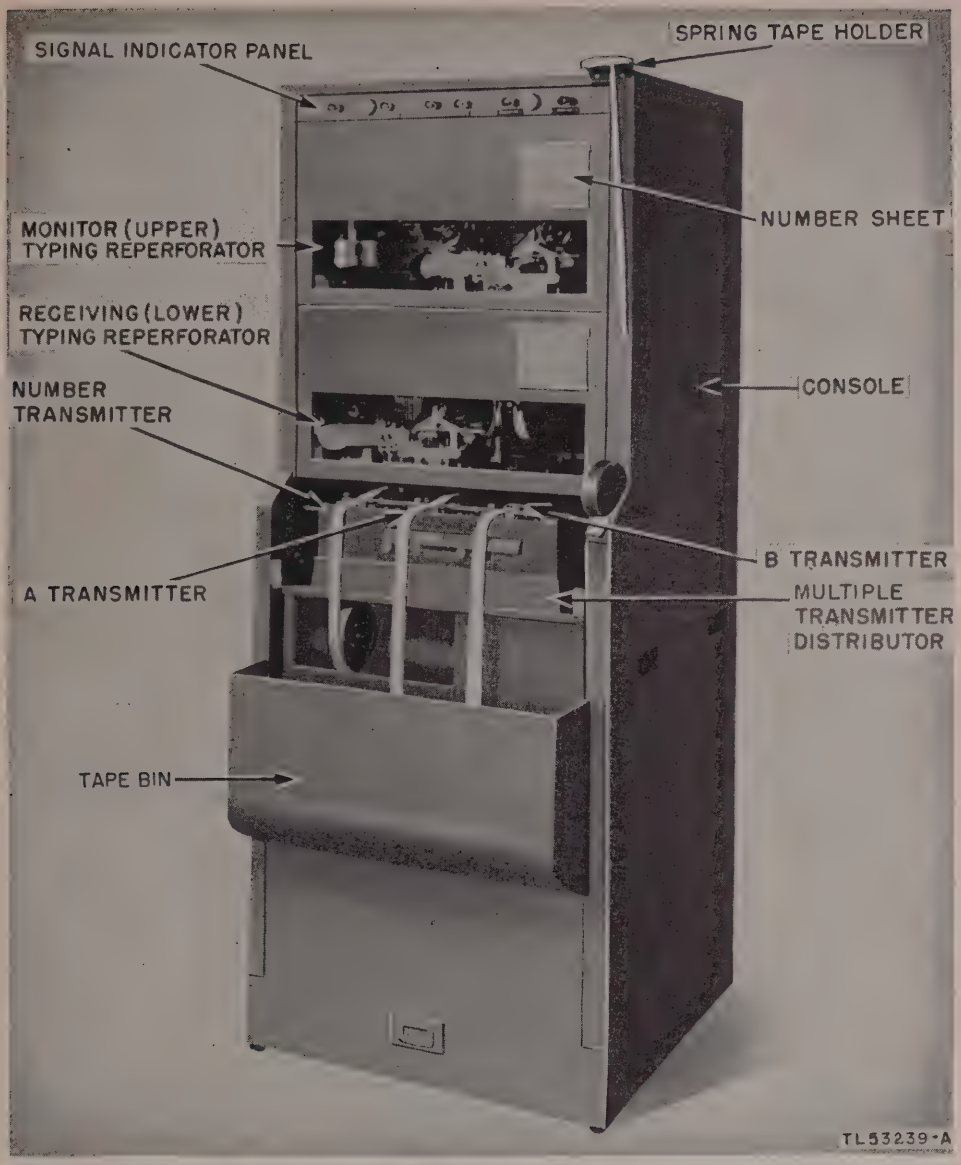

Figure 4. Teletypewriter Set AN/TGC–1 (or AN/TGC–1A), arrangements of components.

c. Tape Winder. The tape winder and its motor are located on the same shelf with and to the left of the monitor typing reperforator. The tape winder automatically winds the tape perforated by the monitor typing reperforator onto the take-up reel, thus making the monitor copy of outgoing messages available in reel form for record or for possible future use.

d. Receiving (Lower) Typing Reperforator. The receiving typing reperforator, located below the monitor typing reperforator, also is housed in a compartment mounted on roller slides so that it may be pulled forward when it is necessary to inspect the receiving typing reperforator. (In the same compartment is housed the monitor jack box containing four monitor jacks, two for the transmit circuits and two for the receive circuits.) Except when wired for SPLIT operation, all messages coming in to the teletypewriter sets are received on the lower (receiving) typing reperforator. (For detailed information on the typing reperforator, see TM 11–2223.)

e. 54A Rectifier. The rectifier unit, which is housed on a shelf behind the receiving typing reperforator, is a dry disk selenium rectifier, with input transformer and output filter. It operates from a 110- to 120-volt, 50- to 60-cycle a-c supply.

f. Power Panel. The power panel, located on

the upper right-hand side and to the rear of the console, provides outlets for the various equipments housed within the console. The panel is connected to the power cabinet (*l* below) housed in the lower right-hand corner of the console.

g. Multiple Transmitter Distributor and Base. The multiple transmitter distributor and base is located below the receiving typing reperforator and rests on a shelf equipped with roller slides so that the equipment may be pulled out for inspection. The multiple transmitter distributor comprises three transmitter units—the unit on the left is arranged to transmit a number tape and is responsive to the presence of an unshift (letters) combination in the number tape to cause stoppage of the number transmitter unit and start of the message transmitter unit—the other two transmitter units are ordinary message transmitters and have no letters-sensing mechanism.

h. Number-Tape Reel. The number-tape reel

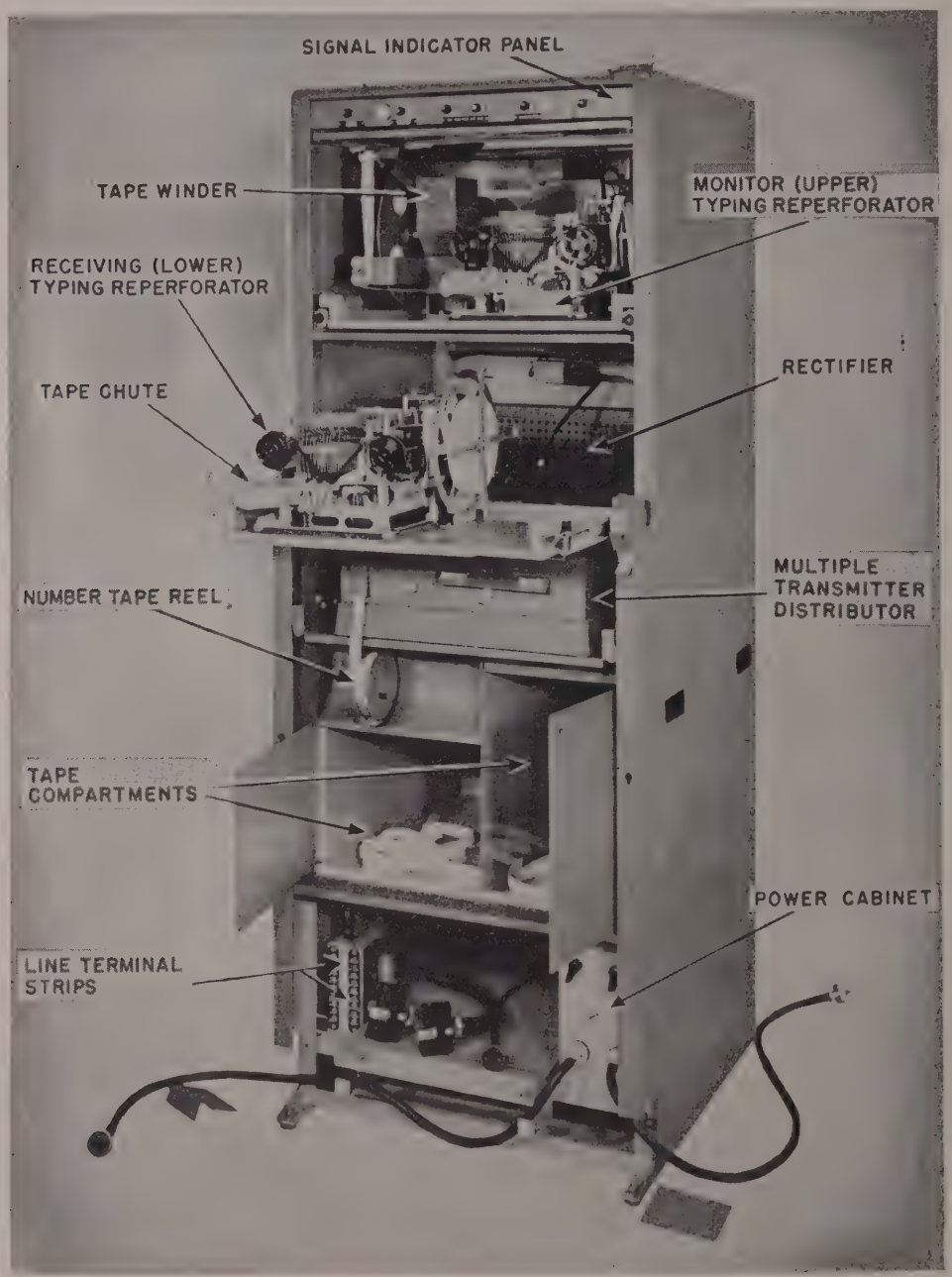

TL 572768

Figure 3. Components of Teletypewriter Set AN/TGC–1 (or AN/TGC–1A).

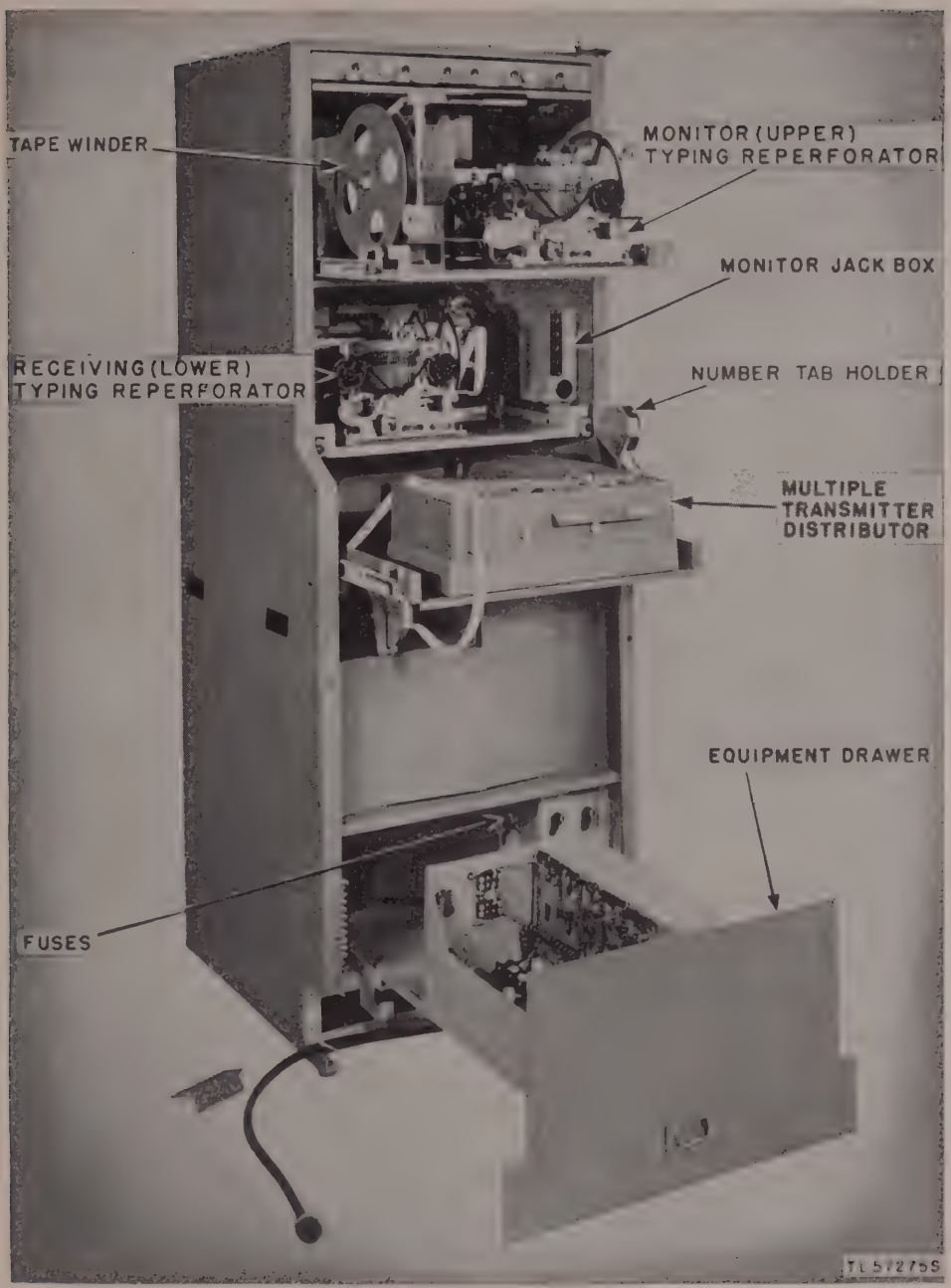

Figure 4. Teletypewriter Set AN/TGC–1 (or AN/TGC–1A), arrangement of components.

is mounted in front of the tape compartment at the top and to the left, immediately below the number transmitter unit. The number-tape reel holds a previously prepared tape to be used by the number transmitter in the transmission of message numbers and can hold a tape of about 750 numbers.

i. Tape Compartments. The tape compartments, located below the multiple transmitter distributor and base, provide a receptacle for sent-message tapes. When working SPLIT, this space may be subdivided by the partition provided so as to separate the tapes sent over each circuit. A separate narrow compartment is provided for the number tape.

j. Line Terminal Strip. The line terminal strip, located in the lower left-hand corner of the console, consists of two sections of nine terminals each. The upper eight terminals on each strip are used for the line and line battery connections. The

ninth terminal on the left section is bonded to the console and is the means by which the entire console may be connected to a local earth ground, as described in paragraph 24. The ninth terminal on the right section provides ground for an alarm bell common to all sets, if this feature is desired. Such alarm bell should be externally batteried with protective resistance. Since ground is carried on one of the control relay contacts, a bell should be chosen drawing not more than 100-120 milliamperes (m. a.).

k. Equipment Drawer. The equipment drawer is located in the middle of the bottom compartment of the console. It is a sheet steel drawer housing the transmitting and receiving relays, control relays, resistors, and spark killers, together with the switches necessary for adapting the teletypewriter sets to various conditions of operation. These conditioning switches, which are described in paragraphs 119 through 122, are the NORMAL SPLIT, DUPLEX SINGLE, POLAR MAKE-BREAK, and OPR. NON-OPR. switches.

l. Power Cabinet. The power cabinet, located to the right of the equipment drawer, provides facilities for power input and switches for adapting the teletypewriter sets for a-c or d-c operation.

4. Packaging Data for Export Shipment

a. Each Teletypewriter Set AN/TGC–1 (or AN/TGC–1A) is packed in five nailed wooden shipping containers. The running spare parts are packed in several additional smaller wooden shipping containers. The sizes and weights of the main boxes given below may vary from time to time because of minor differences in the packaging materials used. (Types of material currently available and differing supply channels account for the minor differences in packaging materials used.) Shipping tons for items similar to this equipment usually are figured on the basis of one shipping ton for each 40 cubic feet.

Item	Outside dimensions (in.)	Volume (cu. ft.)	Gross weight (lb.)
Transmitter distributor and tape winder.	34½ x 26½ x 16½	8. 72	192
Typing reperforator	27 x 25 x 21	8. 20	135
Typing reperforator	27 x 25 x 21	8. 20	135
Console cabinet	79½ x 38 x 31	54. 20	602
Equipment drawer, rectifier, etc.	37½ x 33½ x 27½	20. 00	240

b. The components of Teletypewriter Set AN/TGC–1 (or AN/TGC–1A) are all packaged similarly and are packaged for protection against the deteriorating effects of exposure to the elements; and all except the console cabinet are cushioned similarly against physical or mechanical damage. In each instance, the equipments are fastened solidly to the bases of the inner shipping containers and surrounded with a sealed moisture-proof-vaporproof barrier of laminated plastic, metal foil, and cloth, and with an outer sealed waterproof barrier of asphaltic paper. The com-

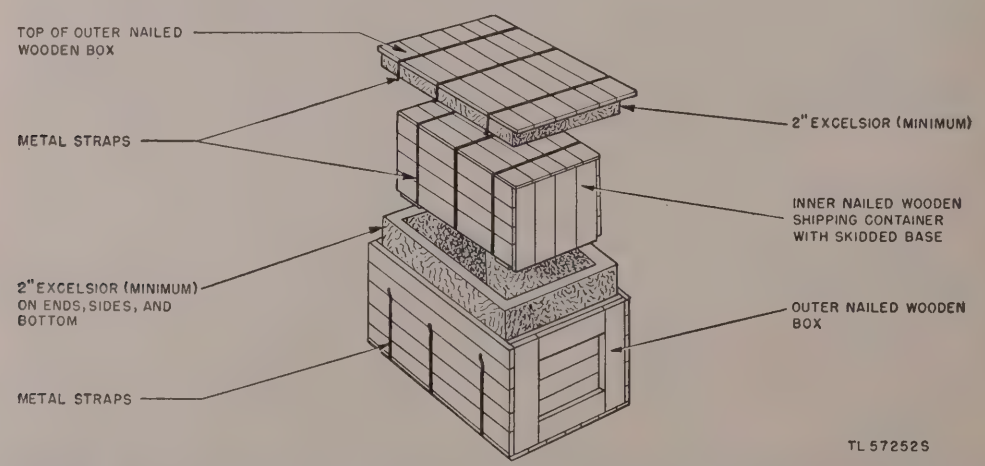
TOP OF OUTER NAILED WOODEN BOX
METAL STRAPS
2" EXCELSIOR (MINIMUM) ON ENDS, SIDES, AND BOTTOM
METAL STRAPS
2" EXCELSIOR (MINIMUM)
INNER NAILED WOODEN SHIPPING CONTAINER WITH SKIDDED BASE
OUTER NAILED WOODEN BOX
TL 57252S

Figure 5. Cushioning fragile equipment for oversea shipment, extended domestic shipment, or for storage exceeding 6 months.

ponents of the shipping containers are protected from rubbing against the barriers by layers of heavy flexible corrugated paper. A dehydrating agent, such as silica gel, is inclosed within each package to assure maintenance of a proper low humidity. Adequate cushioning against physical shock, which may easily damage components of teletypewriter sets, is accomplished by placing each sealed and strapped inner nailed wooden shipping container within a second nailed wooden box, allowing on all sides, ends, top, and bottom sufficient room for a 2-inch thickness of excelsior packed to a density of 3 pounds per cubic foot. (See fig. 5.) The outer box does not have skids.

5. Packaging Data for Domestic Shipment

Teletypewriter Set AN/TGC–1 (or AN/TGC–1A) packed for domestic (other than oversea) shipment may be received in shipping containers similar to those described in paragraph 4, with the following changes, depending upon the amount of handling anticipated and the length of storage contemplated.

a. The use of a dehydrating agent, or desiccant, and a moistureproof-vaporproof barrier may be omitted.

b. The use of excelsior cushioning and the outer shipping container may be omitted.

Section II. APPLICATION

6. System Application

a. Because of the continuous transmission feature, Teletypewriters AN/TGC–1 and AN/TGC–1A are installed in comcenters or tape-relay stations to save line time. (Fig. 12 shows Teletypewriter Sets AN/TGC–1 or AN/TGC–1A, with other teletypewriter equipment, in a comcenter.) The AN/TGC–1 (or AN/TGC–1A) at the local station usually is connected to an AN/TGC–1 (or AN/TGC–1A) at the distant station. In a local comcenter or tape-relay station, teletypewriter sets may be used singly or may be set up side-by-side and will transmit to and receive from a like number of teletypewriter sets at the distant station.

b. A typical arrangement of the AN/TGC–1 (or AN/TGC–1A) is shown in figure 6. Outlying stations A, B, C, and D (teletypewriters TT–7/FG, or similar teletypewriter equipment) send messages to station E for transmission to other stations within the net. Messages are received at station E on Teletypewriter Sets TC–16, or similar teletypewriter sets, and are retransmitted by the AN/TGC–1 (or AN/TGC–1A). Messages are received at station F on the AN/TGC–1 (or AN/TGC–1A) and retransmitted to outlying stations G, H, and I over Teletypewriter Sets TC–16 or similar teletypewriter equipment.

c. The type of operation desired determines the application of Teletypewriter Set AN/TGC–1 (or AN/TGC–1A). Application of these teletypewriter sets for different types of operation is described in paragraphs 7 through 12 and illustrated in figures 6 through 11. In the illustrations, transmission in one direction is indicated by unbroken lines, transmission in the other direction by broken lines; arrows indicate the direction of transmission. The diagrams are prepared on a single-line basis, each line representing one circuit (a circuit is considered to be two-wire or single-wire with ground return). For the purpose of illustrating the application of teletypewriter sets, single-unit application is shown.

7. Application for Normal Duplex Make-and-Break (Neutral) Operation (fig. 6)

a. Normal duplex make-and-break operation provides simultaneous transmission and reception over two external circuits.

b. Figure 6 illustrates the application of teletypewriter sets for normal duplex make-and-break operation over two external circuits. The facilities provided by Teletypewriter Set AN/TGC–1 permit station E to receive messages from station F and at the same time to transmit to station F. The monitoring (upper) typing reperforator of the teletypewriter sets provides a copy of all messages transmitted.

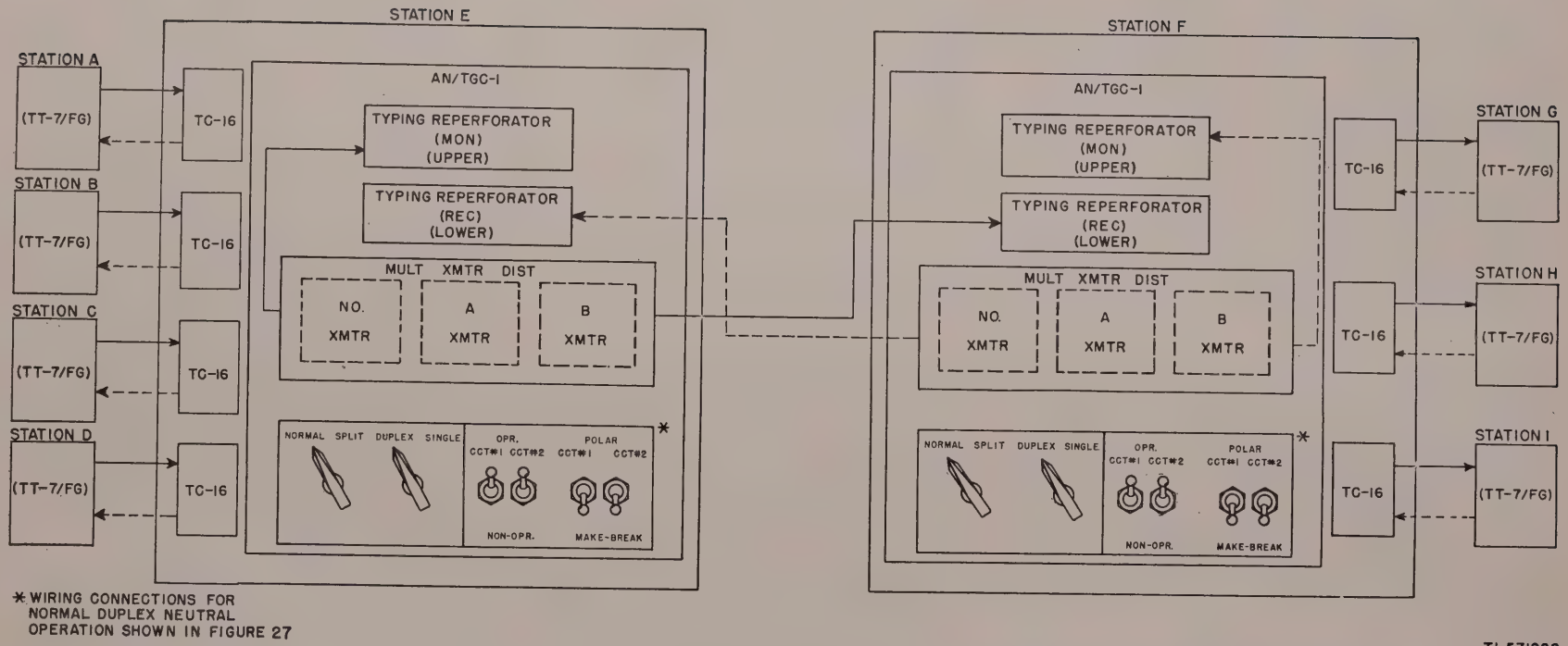

Figure 6. Teletypewriter Sets AN/TGC–1, typical system application, using normal duplex make-and-break operation

8. Application for Normal Duplex Polar Operation (fig. 7)

a. Normal duplex polar operation provides simultaneous transmission and reception over two external circuits.

b. Figure 7 illustrates the application of teletypewriter sets for normal duplex polar operation. Stations A, B, and C transmit, over a make-and-break (neutral) circuit, messages which are received at station D on Teletypewriter Sets TC–16. At station D the AN/TGC–1A, with wiring and switches set for normal duplex polar operation, transmits over a polar circuit to the AN/TGC–1A, set for normal duplex polar operation, at station E. At station E the received messages are relayed to distant stations F, G, and H over Teletypewriter Sets TC–16 operating on neutral circuits. With teletypewriter sets applied for normal duplex polar operation, station D can receive messages from station E at the same time station D is transmitting to station E.

9. Application for Normal Single Operation (fig. 8)

a. In normal single operation, transmission and reception cannot be carried on simultaneously. The receiving (lower) typing reperforator is locked out during transmission and the transmitter units and monitor (upper) typing reperforator are locked out during reception.

b. Where a full duplex circuit is not available, AN/TGC–1 and AN/TGC–1A may be arranged for make-and-break (neutral) operation over a half-duplex (single) circuit, as shown in figure 8. Since transmission and reception cannot be carried on simultaneously, for purposes of illustration transmission between stations D and E is shown in one direction only, although station E can transmit to station D (but not at the same time station D is transmitting to station E). Figure 8 shows distant stations A, B, and C connected to Teletypewriter Sets TC–16 on full duplex circuits. At station D the tape is transferred manually to Teletypewriter Set AN/TGC–1, with wiring and switches set for normal single neutral operation, and is transmitted to another AN/TGC–1, arranged for normal single neutral operation, at station E. During transmission of the message, the receiving (lower) typing reperforator at station D is locked out. During reception at station E the monitoring (upper) typing reperforator and transmitter units are locked out; the red break lamp (on the signal indicator panel) lights to indicate the transmitter units are locked out.

10. Application for Split Duplex Make-and-Break (Neutral) Operation (fig. 9)

a. Split duplex make-and-break operation provides simultaneous transmission and reception over four external circuits.

b. Application of Teletypewriter Sets AN/TGC–1 using split duplex make-and-break (neutral) operation is shown in figure 9. Distant stations A, B, and C transmit to a tape-relay or comcenter, such as station D, where the messages are received on Teletypewriter Sets TC–16 or similar teletypewriter equipment. The messages are retransmitted by the AN/TGC–1 over four external neutral circuits and are received by an AN/TGC–1 at a tape-relay or comcenter, such as station E, and retransmitted by Teletypewriter Sets TC–16 to distant stations F, G, and H. With wiring connections as shown in figure 25, transmission from the A transmitter (circuit No. 1) will be received on the lower typing reperforator, and transmission from the B transmitter (circuit No. 2) will be received on the upper typing reperforator. Both transmitters at station E may be transmitting to station D at the same time that both transmitters at station D are transmitting to station E. With AN/TGC–1 and AN/TGC–1A arranged for split duplex operation, no monitor copy of outgoing transmission is furnished. If a monitor copy is desired for any circuit, a model 15 teletypewriter may be used to provide such a copy, with connection to the circuit made through the monitor jack box, as described in paragraph 32.

11. Application for Split Duplex Polar Operation (fig. 10)

a. Split duplex polar operation provides simultaneous transmission and reception over four external circuits.

b. Teletypewriter Sets AN/TGC–1A arranged for split duplex polar operations are shown in figure 10. Signals from distant stations A, B, and C are transmitted, over neutral circuits, to tape-perforating teletypewriter equipment at tape-relay or comcenter, station D. The tape is transferred to a Teletypewriter Set AN/TGC–1A arranged

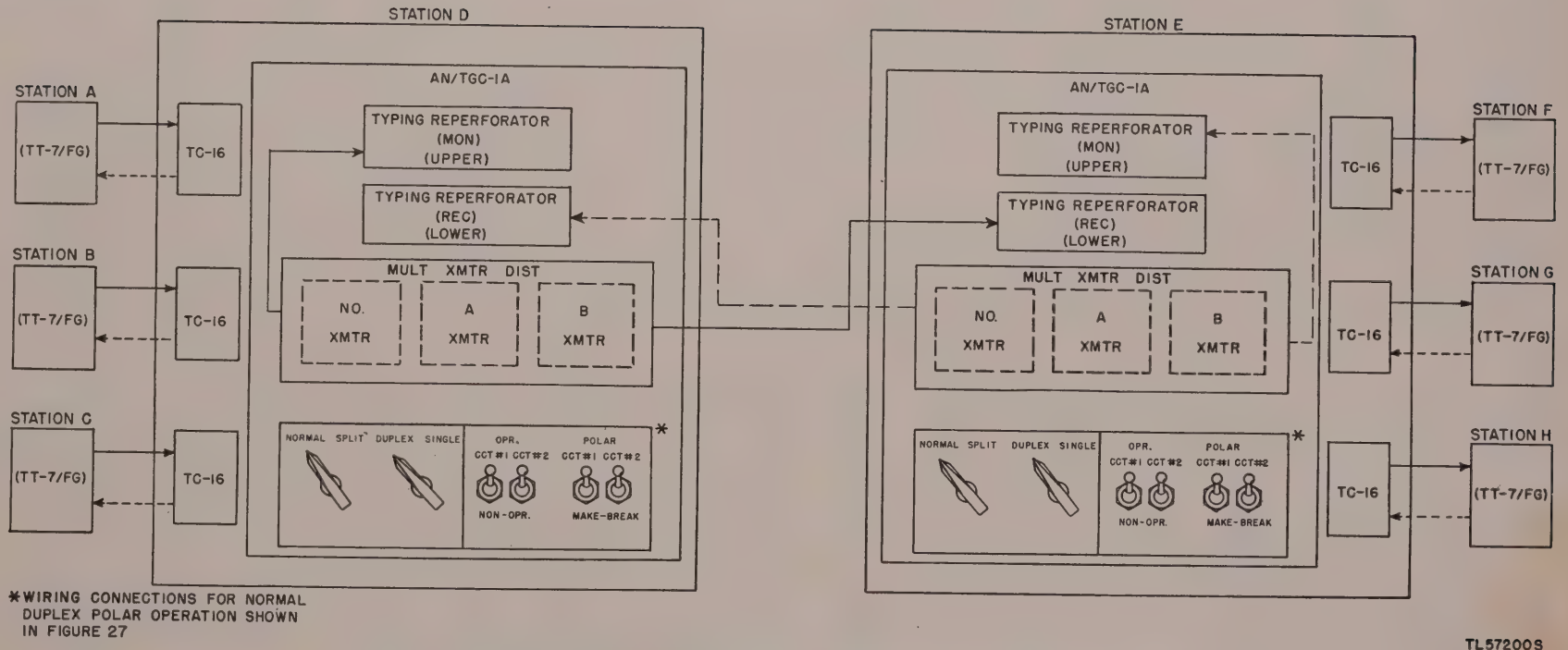

Figure 7. Teletypewriter Sets AN/TGC–1A, application for normal duplex polar operation.

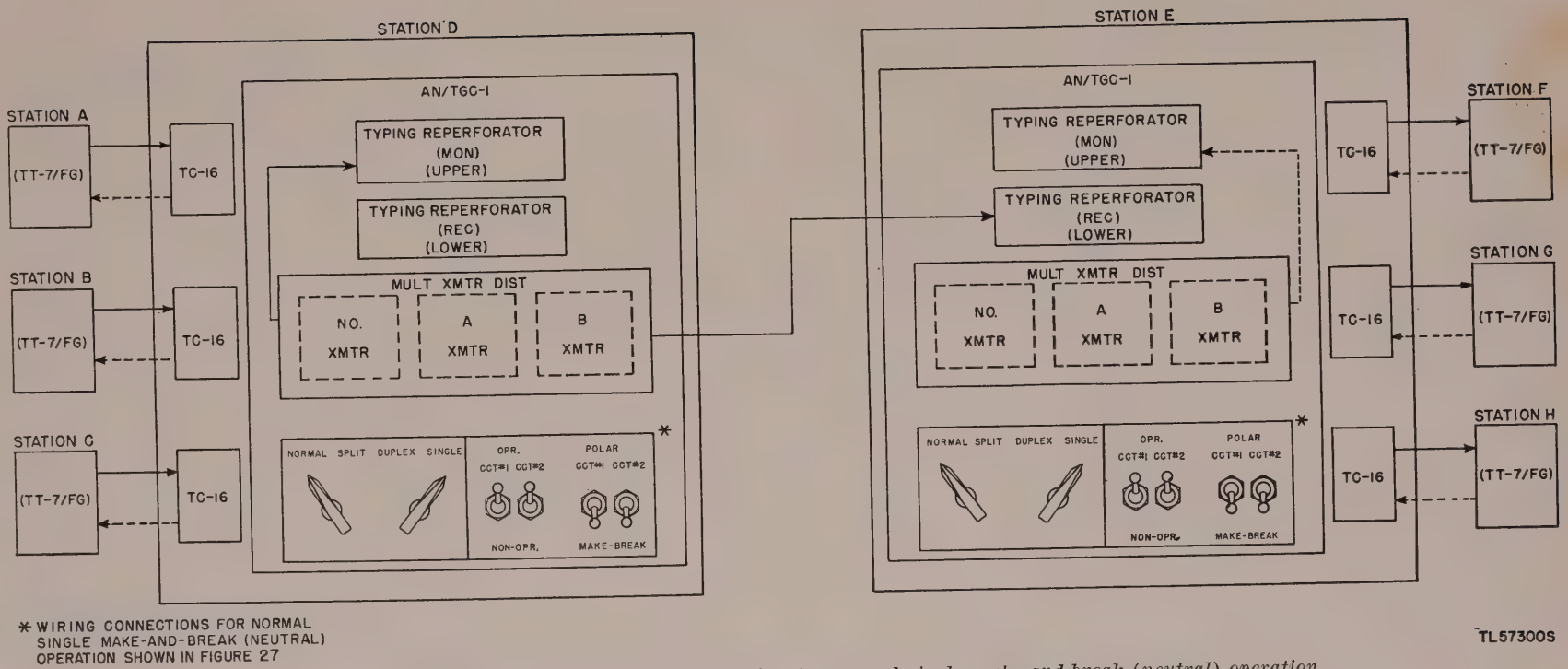

Figure 8. Teletypewriter Sets AN/TGC-1, application for normal single make-and-break (neutral) operation.

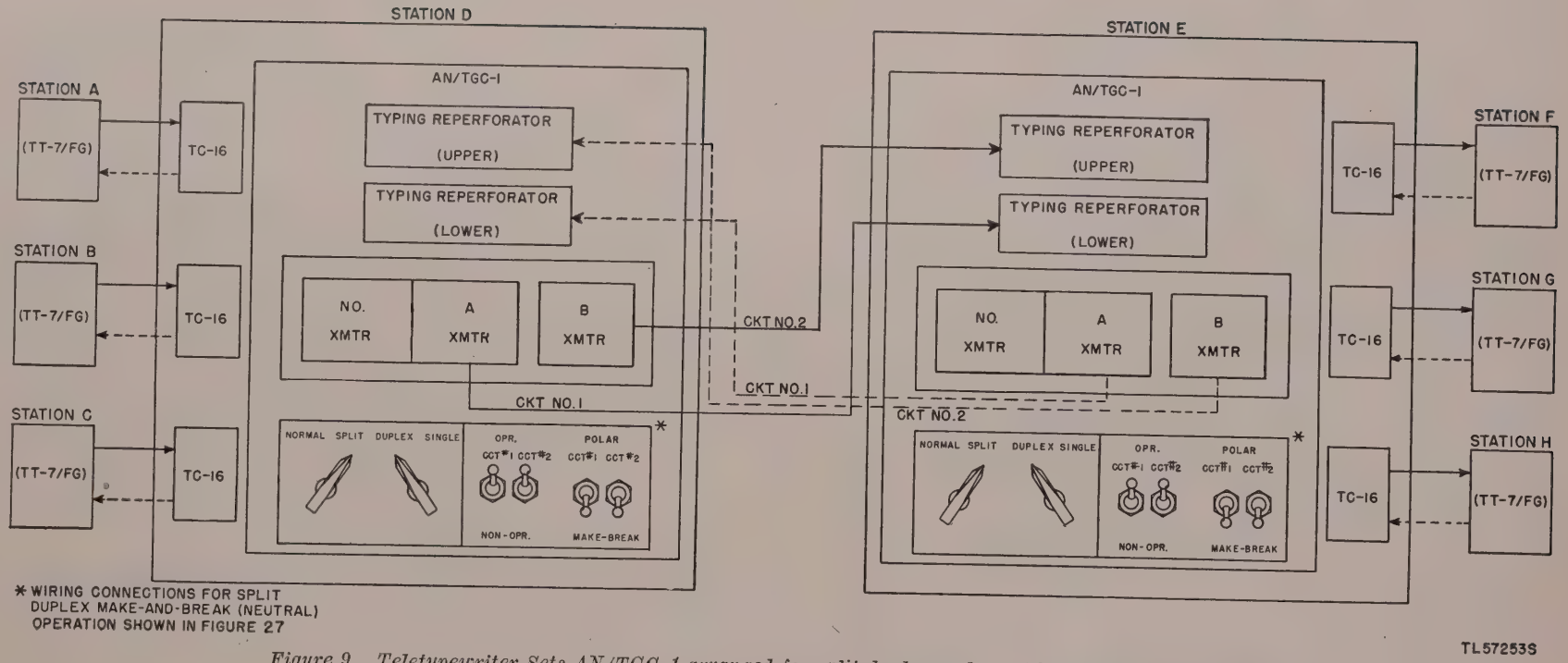

Figure 9. Teletypewriter Sets AN/TGC–1 arranged for split duplex make-and-break (neutral) operation.

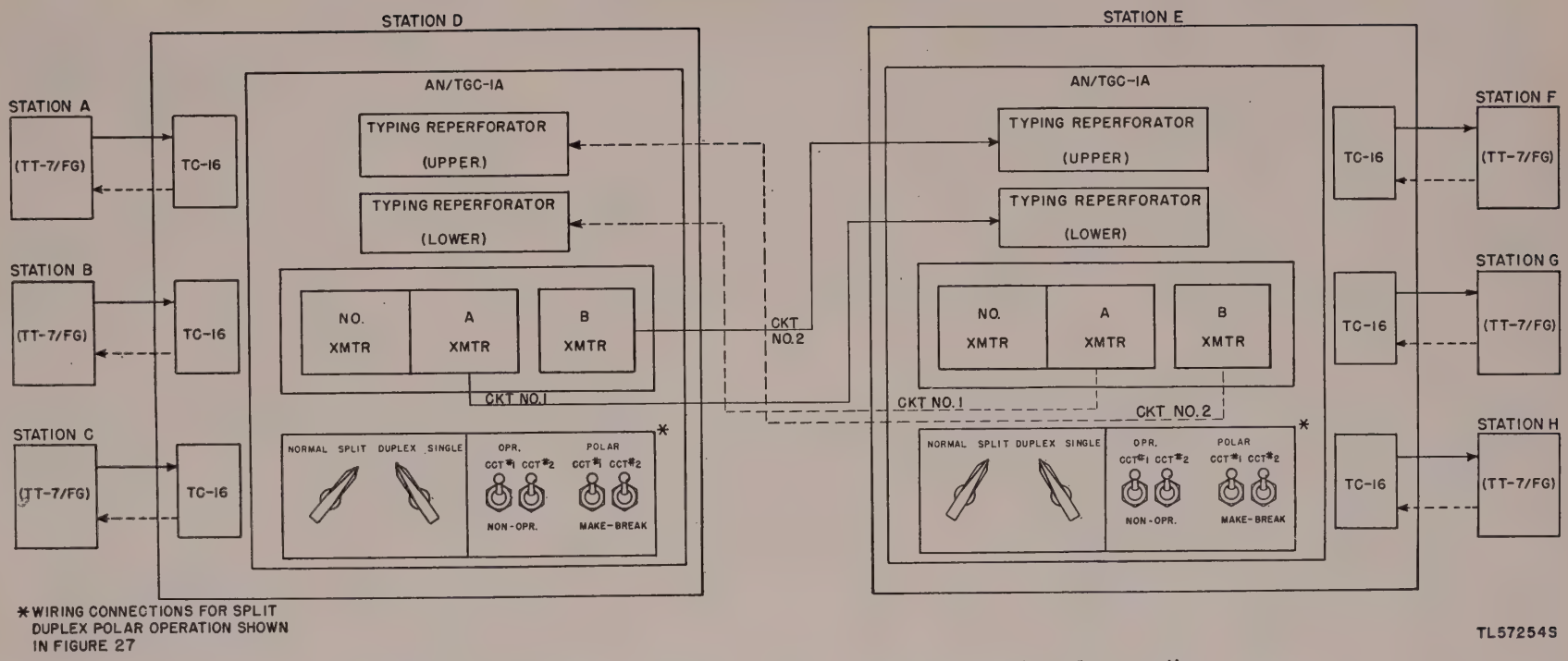

Figure 10. Teletypewriter Sets AN/TGC–1A arranged for split duplex polar operation.

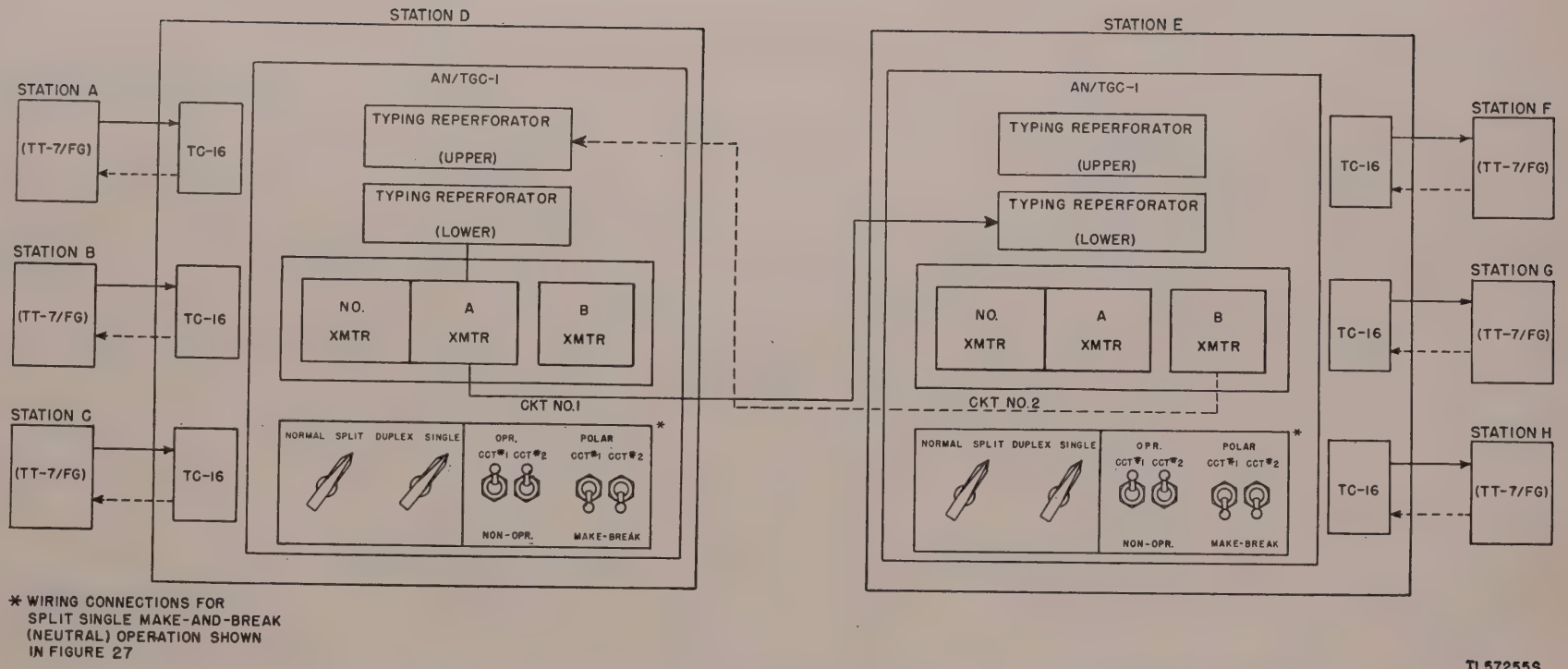

Figure 11. Teletypewriter Sets AN/TGC–1 arranged for split single make-and-break (neutral) operation

for split duplex polar operation, and the messages are sent out over four external polar circuits to station E where they are received on another AN/TGC–1A. The messages are retransmitted by Teletypewriter Sets TC–16, over make-and-break (neutral) circuits, to distant stations F, G, and H. With wiring connections as shown in figure 25, transmission from the A transmitter (circuit No. 1) will be received on the lower typing reperforator, and transmission from the B transmitter (circuit No. 2) will be received on the upper typing reperforator. Both transmitters at station E may be transmitting to station D at the same time that both transmitters at station D are transmitting to station E.

12. Application for Split Single Operation (fig. 11)

a. Split single operation provides transmission or reception over two external circuits. Transmission and reception cannot be carried on simultaneously on either circuit, but circuit No. 1 may be transmitting at the same time circuit No. 2 is receiving or circuit No. 2 may be transmitting at the same time circuit No. 1 is receiving. A monitor copy of messages transmitted is furnished on circuit No. 1; if a monitor copy of transmission over circuit No. 2 is desired, a Teletypewriter TT–5/FG may be connected to circuit No. 2 by means of the monitor jack box. With split single operation, a teletypewriter set furnishes the following facilities:

(1) Transmission over circuits No. 1 and No. 2; or
(2) Reception over circuits No. 1 and No. 2; or
(3) Transmission over circuit No. 1 and reception over circuit No. 2; or
(4) Transmission over circuit No. 2 and reception over circuit No. 1.

b. Teletypewriter Sets AN/TGC–1 (or AN/TGC–1A) arranged for split single operation over a make-and-break (neutral) circuit are shown in figure 11. Since simultaneous reception and transmission are not possible with this arrangement, for purposes of illustration circuits No. 1 and No. 2 show transmission in one direction only; however, over any one circuit messages may be transmitted and received in both directions, though not simultaneously. In figure 11 distant stations A, B, and C transmit to tape-perforating teletypewriter equipment at a tape-relay or comcenter such as station D. The tape is transferred manually to Teletypewriter Set AN/TGC–1 and transmitted to another AN/TGC–1 at station E. At station E the tape is transferred manually to Teletypewriter Sets TC–16 and retransmitted to distant stations F, G, and H. At the same time, station E may be transmitting to station D over circuit No. 2, which messages are retransmitted by Teletypewriter Sets TC–16 to distant stations A, B, and C.

13. Typical Comcenter Lay-Out (fig. 12)

Figure 12 shows Teletypewriter Sets AN/TGC–1 (or AN/TGC–1A) installed in a large theater comcenter which uses both wire circuits and radio channels. The different types of facilities and equipment with which Teletypewriter Sets AN/TGC–1 or AN/TGC–1A are used at such a comcenter installation also are shown in figure 12.

14. General Functioning of Equipment

a. General. Teletypewriter Sets AN/TGC–1 and AN/TGC–1A receive messages from the line in the form of electrical impulses and record the message both in code perforations and in typewritten characters on the same paper tape. While one typing reperforator receives messages from a distant station, the other typing reperforator monitors outgoing messages being transmitted by the multiple transmitter distributor. AN/TGC–1 and AN/TGC–1A therefore provide a means for relaying messages in perforated tape form without having to repunch all or any part of the message at the relay station. The tape being perforated by the receiving typing reperforator may be torn or cut into individual message tapes and manually inserted in other tape-transmitting teletypewriter equipment at the relay station for retransmission to the station called for in the message heading. This rerouting of individual messages may take place without stopping the receiving function or interrupting the transmitting function of the Teletypewriter Set AN/TGC–1 (or AN/TGC–1A). While messages are being received by the teletypewriter set and are being relayed over other comcenter facilities, messages coming in to the comcenter in the form of perforated tape may be inserted manually in the multiple transmitter distributor of Teletypewriter Set AN/TGC–1 (or AN/TGC–1A) for retransmission to another AN/TGC–1 (or AN/TGC–1A) at the distant station.

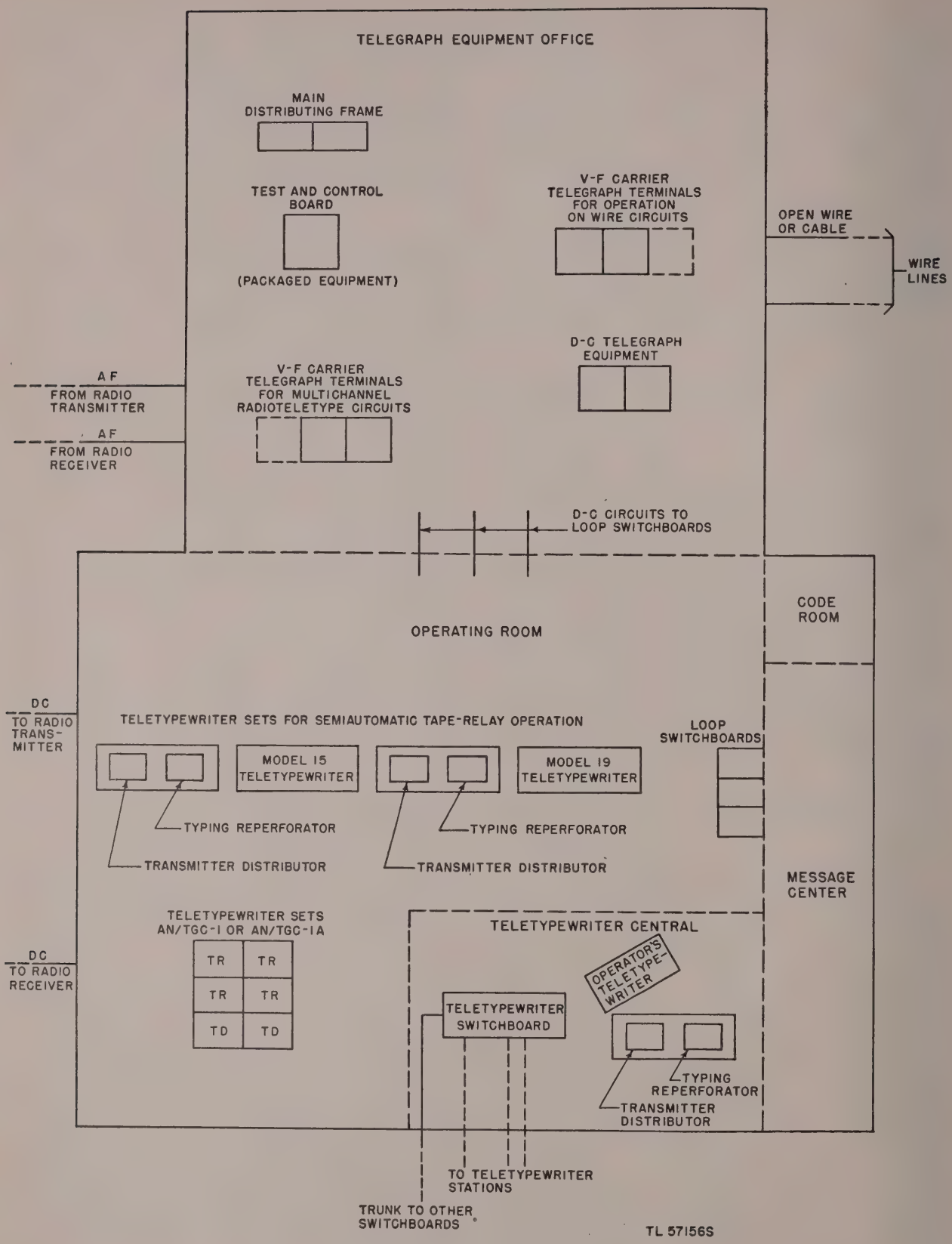

Figure 12. Typical comcenter lay-out.

b. Arrangement. Teletypewriter Sets AN/TGC–1 and AN/TGC–1A are so designed that all power and line connections are accessible from the front, and the consoles therefore can be set up side-by-side, back-to-back, or against the wall.

c. Power Source. The governed-series motors of Teletypewriter Sets AN/TGC–1 and AN/TGC–1A are adapted for 110-volt a-c or d-c operation. However, see TM 11–2223 for an explanation of the reperforator motor of AN/TGC–1. (If the tape-winder governed-series motor is replaced by a Barber-Colman induction-type motor (par. 111), the induction-type motor operates from 115-volt a. c.)

d. Line Circuit Connections. The line terminal strip located to the left of the equipment drawer on the console is used for line and ground connections.

e. Types of Operation. Teletypewriter Sets AN/TGC–1 and AN/TGC–1A are designed to work duplex or single and, when working duplex, transmission and reception may be either polar or make-and-break (neutral).

15. Five-Unit Start-Stop Teletypewriter Code (fig. 13)

The signaling code used to transmit messages between teletypewriter equipments consists of five selecting impulses used in various combinations of current and no-current intervals and two synchronizing impulses. These synchronizing impulses consist of one start and one stop impulse. Each group of five selecting impulses is preceded by a start (no-current) impulse and followed by a stop (current) impulse. These start and stop impulses are used to maintain synchronism between the sending and receiving teletypewriter equipments.

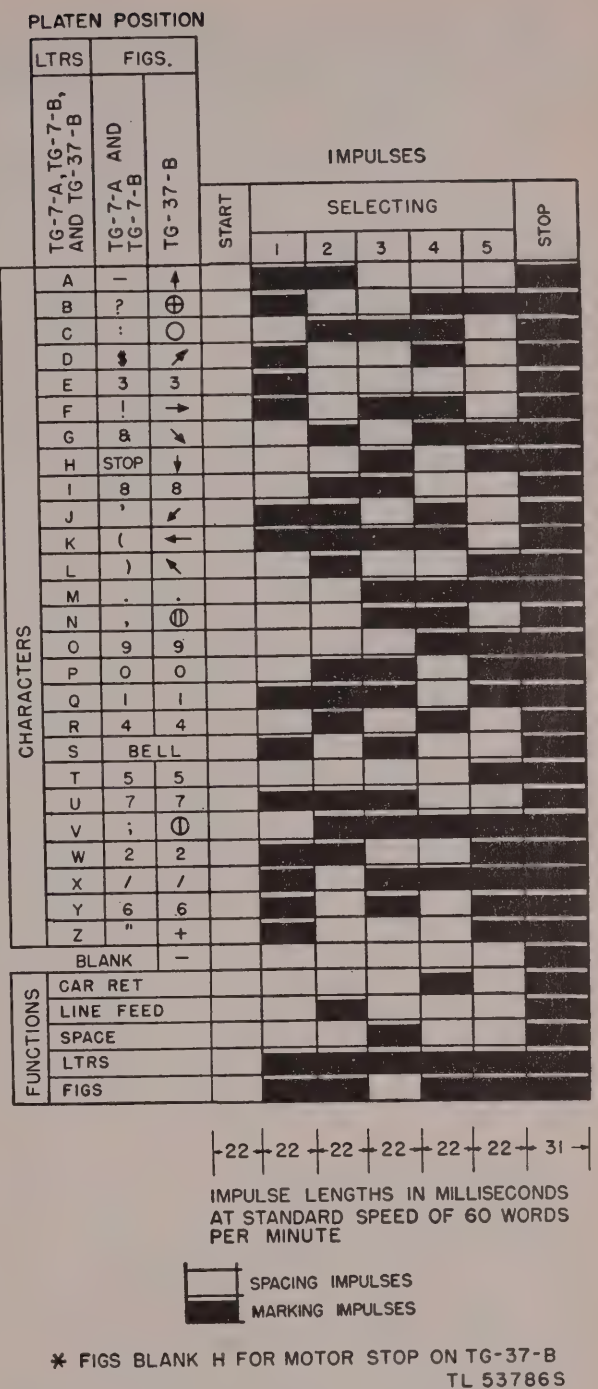

Figure 13. Five-unit start-stop teletypewriter code.

16. Synchronism

All reperforators and transmitter distributors equipped with the same type of gear combination and motor can be adjusted to operate at the same average speed. The motor governor (fig. 115) controls the speed of the equipment within very close limits. The remaining small differences in speed could still cause the receiving mechanism gradually to get out of step with the transmitting mechanism except for the control exercised by the start and stop impulses in the five-unit start-stop teletypewriter code. This control is accomplished by designing the receiving mechanism to complete one revolution for each group of five selecting impulses quickly enough to have time to stop and wait for the next start impulse. Small variations in speed cause the receiving mechanism to wait only a few thousandths of a second more or

less than the normal waiting period before the next start impulse. This arrangement keeps all the equipment connected in the same circuit in exact synchronism by insuring that the receiving mechanisms are always in the right position at the beginning of each group of five selecting impulses.

Section III. ASSEMBLY, INSTALLATION, AND DISASSEMBLY

17. Location of Equipment

a. Before starting to install Teletypewriter Sets AN/TGC–1 (or AN/TGC–1A), decide upon the general lay-out in view of the local conditions. Locate the equipment where traffic can be handled as efficiently as possible with maximum protection for the equipment and operating personnel. Generally speaking, it is a good idea to locate the teletypewriter sets near the teletypewriter central and its associated equipment. (See fig. 12 for a typical comcenter lay-out.) Teletypewriter Sets AN/TGC–1 and AN/TGC–1A may be set up side by side, back to back, or against the wall, depending on space available.

b. All signal, power, and ground wires should be run in a neat and secure manner, with no loose, dangling, or surplus wire that might be a safety hazard to personnel. In making connections to terminals, care must be taken to see that the insulation is well cleaned from the wire and that the wire has not been nicked. The wire should be wrapped around the terminal screws in a clockwise direction with no excess bare wire on either side of the terminal screws. It is important also that the terminal screws be tight.

18. Unpacking Oversea Shipping Containers

a. Teletypewriter Set AN/TGC–1 (or AN/TGC–1A) is packed for export in five main shipping containers. Each of the five main cases is marked with an orange band indicating Signal Corps equipment; each of the cases required for one complete teletypewriter set is marked with an orange disk to indicate that each box is part of a group of boxes containing one equipment. Running spare parts are packed in separate wooden boxes which, when packed, weigh approximately 50 pounds each. Spare parts are packaged individually within the wooden boxes. Packing data for the main containers are given in paragraph 5. Figure 14 illustrates the typical external characteristics of oversea shipping containers.

b. Teletypewriter Sets AN/TGC–1 and AN/TGC–1A may be damaged easily during unpacking. When unpacking, cut metal bands, remove tops, sides, etc., of the cases carefully and according to the directions given below. Unpacking should be done in a place where the equipment will not be subjected to dust, dirt, or excessive moisture.

c. Be careful during unpacking not to damage the packaging materials any more than absolutely necessary. Store the inside packaging materials in their respective shipping containers for reuse, with the exception of the bags of desiccant, or dehydrating agent, which will be destroyed. Cut metal straps with a suitable cutting device or twist with pliers until the straps break. Remove nails with a nail puller; prying the nails may damage the equipment. Figure 15 is a cutaway view of a typical oversea shipping container showing many of the details referred to below. Figure 16 shows details of the interior placement of the multiple transmitter distributor and base and tape winder. The equipment drawer, rectifier, signal indicator panel, and boxed relays are shown in figure 17. With an understanding of the packaging method used, each container can be opened quickly and without damage to equipment or injury to personnel. Details of packaging encountered as the containers are unpacked, as well as the placement of items of equipment within each shipping container are described below. Specific instructions are given for opening containers and inner wrappings.

(1) *Each of two typing reperforators.*

(*a*) Cut the metal straps.

(*b*) Remove nails with nail puller and remove the top of outer shipping container.

(*c*) Remove sufficient excelsior to permit grasping the inner box securely.

(*d*) Lift out the inner, skidded, shipping container.

(*e*) Cut the metal straps of the inner box.

(*f*) Remove nails with nail puller and remove the top and one side of the inner shipping container.

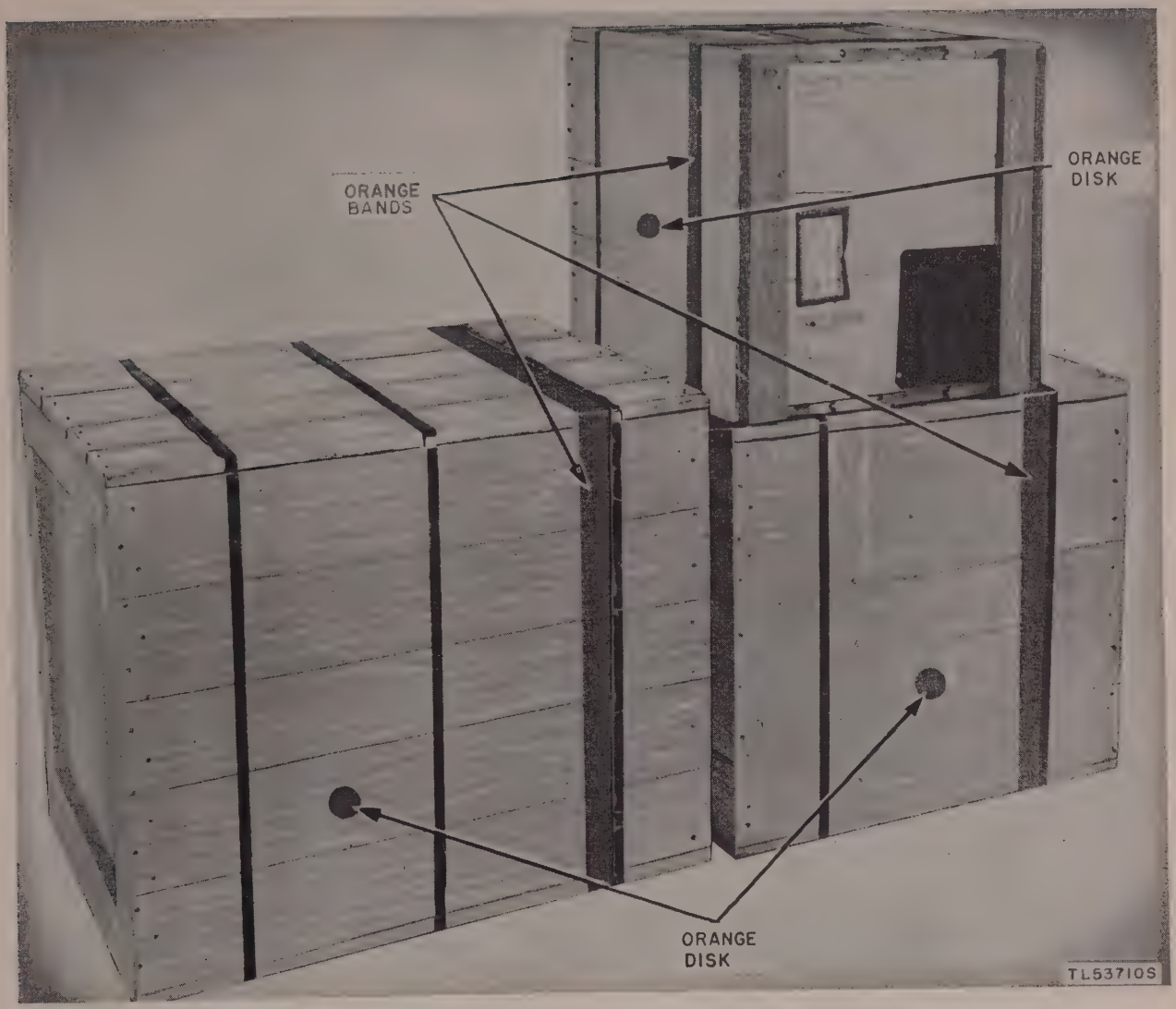

Figure 14. Typical oversea shipping containers.

(*g*) Cut the outer waterproof barrier carefully and lay it down around skidded base.

(*h*) Cut the tape and unwrap the heavy flexible corrugated paper and lay it down around the base.

(*i*) Slit the moistureproof-vaporproof barrier along its top seams; spread it apart and lay it down around the base.

(*j*) Inside the metal foil (moistureproof-vaporproof) barrier is a wrapping of heavy flexible corrugated paper secured by tape. Slit the tape and spread the wrapping about the base.

(*k*) Remove the bags of desiccant or other dehydrating agent. Be careful not to damage the bags or spill any of the contents.

(*l*) Remove nuts and washers from the bolts holding the typing reperforator in place. Lift off the reperforator.

Note. Bolts holding the unit in place were inserted through the skid base of the inner nailed wooden container, having bolt heads countersunk in the skids. The bolts pass through waterproof and moistureproof-vaporproof barriers and through corrugated paper wrappings into the typing reperforator. Each hole through a barrier or wrapping is gasketed and sealed with adhesive having a rubber base.

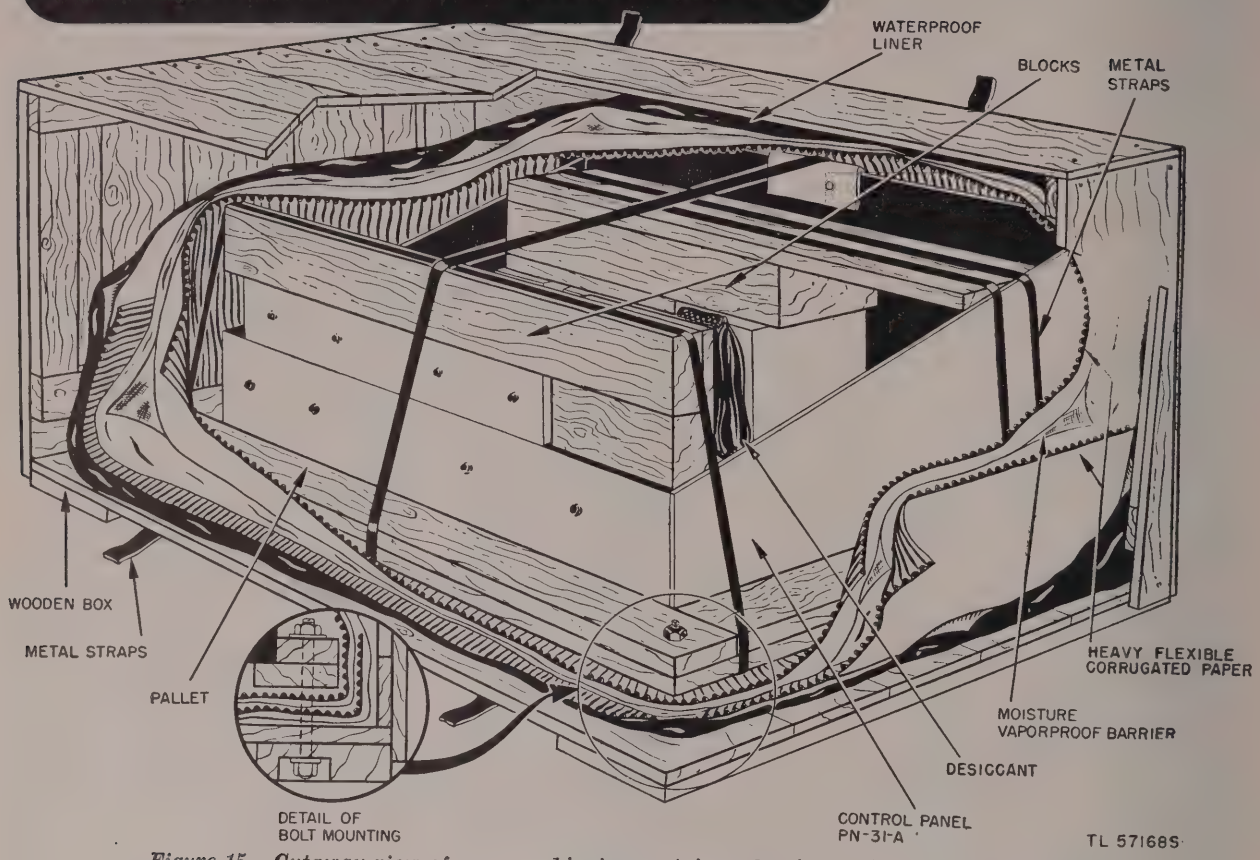

Figure 15. Outaway view of oversea shipping container showing typical packaging details.

(2) *Multiple transmitter distributor and base and tape winder* (fig. 16).

(*a*) Cut the metal straps.

(*b*) Remove nails with nail puller and remove the top of outer shipping container.

(*c*) Remove sufficient excelsior to permit grasping the inner box securely.

(*d*) Lift out the inner, skidded, shipping container.

(*e*) Cut the metal straps of inner box.

(*f*) Remove nails with nail puller and remove the top and one side of the inner shipping container.

(*g*) Slit the waterproof bag liner inside the wooden container.

(*h*) Slit the moistureproof-vaporproof metal foil barrier along its top seams.

(*i*) Inside moistureproof-vaporproof barrier is a wrapping of heavy, flexible, corrugated paper around the transmitter distributor and the tape winder. Slit the tape holding this wrapping in place.

(*j*) Lay the bag liner, moistureproof-vaporproof barrier, and corrugated paper aside in order to get at equipment.

(*k*) Remove bags of desiccant, or other dehydrating agent, which are attached to equipment with twine. Be careful not to spill the contents.

(*l*) The tape-winder shaft, the tape-winder motor, and all the corners are cushioned by means of heavy, flexible, corrugated paper taped into position.

(*m*) The 10-inch tape wheel of the tape winder is over the vertical projecting shaft of the tape winder and is tied in place with twine.

(*n*) The tape winder is secured to the pallet top by means of flat metal straps.

(*o*) The multiple transmitter distributor is secured to the pallet by means of two metal mounting straps.

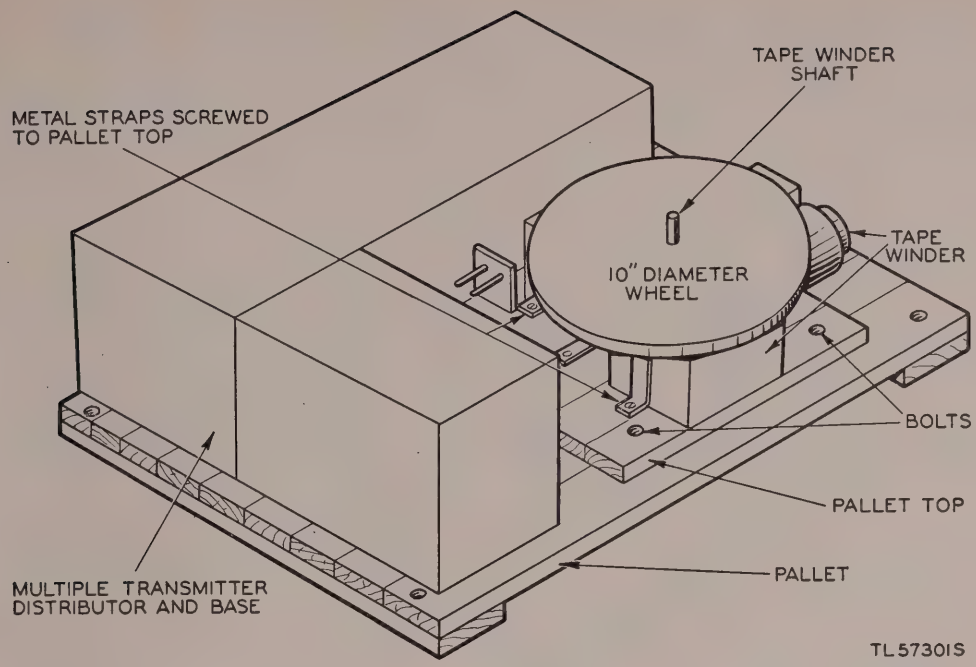

Figure 16. Multiple transmitter distributor and tape winder as mounted inside oversea shipping container.

(*p*) The pallet top holding the tape winder is bolted to the pallet.

(*q*) The entire assembly of pallet and pallet tops holding the tape winder and the multiple transmitter distributor is bolted to the base of the shipping container. The bag liner of waterproof paper, the metal foil moistureproof-vaporproof barrier, and the corrugated paper wrapping are between the base and the pallet. Bolts extend through these wrappings and, as each is placed, the holes around the bolts are sealed with adhesive having a rubber base.

(3) *Equipment drawer, rectifier, signal indicator panel, etc.* (fig. 17).

(*a*) Cut the metal straps.

(*b*) Remove nails with nail puller and remove top of the outer shipping container.

(*c*) Remove sufficient excelsior to permit grasping the inner box securely.

(*d*) Lift out the inner, skidded, shipping container.

(*e*) Cut the metal straps of the inner box.

(*f*) Remove nails with nail puller and remove the top and one side of the inner shipping container.

(*g*) Slit the waterproof bag liner inside the wooden container.

(*h*) Slit the metal foil moistureproof-vaporproof barrier along its top seams.

(*i*) Inside the moistureproof barrier is a wrapping of heavy flexible corrugated paper around the apparatus which is sealed with tape. Slit the tape.

(*j*) Push the waterproof bag liner, the metal foil barrier, and the corrugated paper wrapping down around the base, exposing the packaged equipment.

(*k*) Untie the bags of desiccant and remove them from equipment.

(*l*) The relays in the equipment drawer are wrapped in corrugated paper and fastened with soft iron wire to one side of equipment drawer. Before wrapping, each relay is packaged individually within a fiberboard box.

(*m*) On the opposite side of the equipment drawer from the relays, the signal indicator panel is fastened to the pallet base with carriage bolts.

(*n*) The front panel of the equipment drawer is wrapped in corrugated paper and secured to the pallet blocks with clamps and wood screws. The metal edges of the equipment drawer are secured to the pallet by means of hook straps secured by means of carriage bolts. The back horizontal edge of the

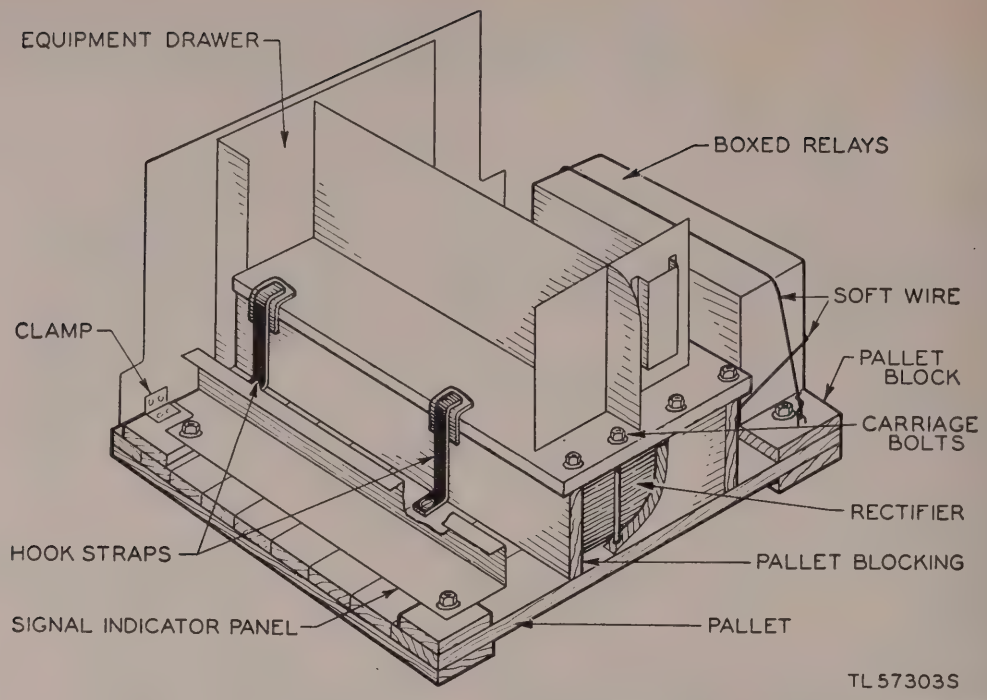

Figure 17. Equipment drawer, rectifier, etc., as arranged for packaging and packing for oversea shipment.

drawer is held by means of four 6½-inch carriage bolts through the upright pallet blocking and the pallet.

(*o*) Underneath the equipment drawer and between the pallet blocking is a rectifier contained in a sealed corrugated fiberboard box. Inside the box with the rectifier are the plugs and relays wrapped in flexible corrugated paper and taped.

(4) *Console cabinet and miscellaneous parts.*

(*a*) Cut the metal straps.

(*b*) Remove nails with nail puller and remove the top and one or both sides of the shipping container.

(*c*) Slit the taped seams of the waterproof paper bag liner.

(*d*) Slit the seams of the metal foil moistureproof-vaporproof barrier.

(*e*) Slit the tape securing the inner wrappings of heavy flexible corrugated paper.

(*f*) Push the waterproof barrier, the moistureproof-vaporproof metal foil barrier, and the corrugated paper wrapping down around the base to expose the packaged console cabinet.

(*g*) Unfasten the bags of dehydrating agent tied to the console cabinet and remove them from the equipment.

(*h*) The console cabinet is secured to the pallet within the shipping container by means of four ¾-inch metal straps. Cut these straps and remove the cabinet from the shipping container.

(*i*) Wedged in place in the tape compartment of the cabinet is a fiberboard box containing the following items individually wrapped in flexible corrugated paper: plugs and cable connections, reperforator doors, cable, end panels, one front tape guard, tape reel, tuning fork, spring tape holder, wiring and assembly specifications, technical manuals, set of teletype bulletins, copy of specifications, tape chutes, tab number-tape holder and tape-reel assembly.

(*j*) In the equipment drawer compartment is the other front tape guard wrapped in flexible corrugated paper, along with the fiberboard box containing 20 rolls of perforator tape.

(*k*) In the other cabinet compartments the sliding shelves and the tape-reel supports are wrapped in two thicknesses of flexible corrugated paper and are tied in place with twine.

19. Unpacking Domestic Shipping Containers

Teletypewriter Set AN/TGC–1 (or AN/TGC–1A) packed for domestic (other than oversea) shipment may be received in containers similar to those used for oversea shipment. At the discretion of the responsible authorities, whenever the distance shipped or the expected period of storage is short, the following portions of the above instructions on packaging and packing may be omitted: The use of a moistureproof-vaporproof metal foil barrier and dehydrating agent; the use of excelsior cushioning and an outer nailed wooden shipping container. Unpacking is to be done as carefully as described above for oversea shipping containers.

Caution: Because of the fragility of Teletypewriter Sets AN/TGC–1 and AN/TGC–1A adequate cushioning must be provided and the equipment must be rigidly secured within the shipping container.

20. Assembly

a. Set the console cabinet in its permanent position.

b. Install the sliding shelves in the cabinet.

c. Mount the tape reels for the typing reperforators by means of the bracket and two screws provided for each.

d. By means of the screws provided, install the tape winder on the shelf to the left of the position for the monitoring (upper) typing reperforator. Put the 10-inch wheel on the tape winder.

e. By means of the screws provided, fasten the number-tape reel in position below the multiple transmitter distributor shelf.

f. By means of the screws provided, secure the spring tape holder to the upper right front corner of the console cabinet.

g. By means of the screws provided, mount the number-tab holder on the right front of the cabinet just above the multiple transmitter distributor shelf.

h. Place the rectifier on its shelf at the back of the lower typing reperforator compartment.

i. Install the relays in the equipment drawer, but leave the drawer out of the cabinet.

j. Attach the tape bin to the console by inserting the two screws on the tape bin into the keylike holes on the console.

k. Install the tape guides on the two typing reperforators.

l. The typing reperforators and the multiple transmitter distributor are installed as described in paragraph 22.

21. Physical Checks

a. During or immediately after the assembly of Teletypewriter Set AN/TGC–1 (or AN/TGC–1A), and in all cases before the teletypewriter set is connected to other equipment, check the following:

(1) Give the entire teletypewriter set a general physical inspection to determine that no damage has occurred during shipment.

(2) Inspect the entire teletypewriter set to determine that no excelsior or packing material has entered the moving parts.

(3) Check all mechanical parts for lubrication. (See sec. X for lubrication instructions.)

(4) Check motors, fuses, switches, cords, and plugs to make sure that all connections and moving parts are in good physical condition. (See parts two and five for additional information.)

b. At least one teletypewriter ribbon will be furnished with each typing reperforator. (See TM 11–2223 for instructions on installing new ribbons.)

c. Paper tape normally is supplied as part of the teletypewriter set. (See TM 11–2223 for instructions on installing the tape.)

22. Installation of Teletypewriter Sets AN/TGC–1 and AN/TGC–1A (fig. 18)

The teletypewriter set, having been placed in a location that is convenient for operation and where good light is accessible, now is ready to be installed for operation. In general, the installation of Teletypewriter Sets AN/TGC–1 and AN/TGC–1A will consist of plugging the various plugs into suitable sockets and receptacles on the console; all intricate wiring connections are made at the factory. Usually each receptacle is marked to show which cord is plugged into it. Where no markings appear on the receptacles, refer to the wiring diagram (figs. 118 through 126) for the particular equipment involved. The following information is the step-by-step description of the

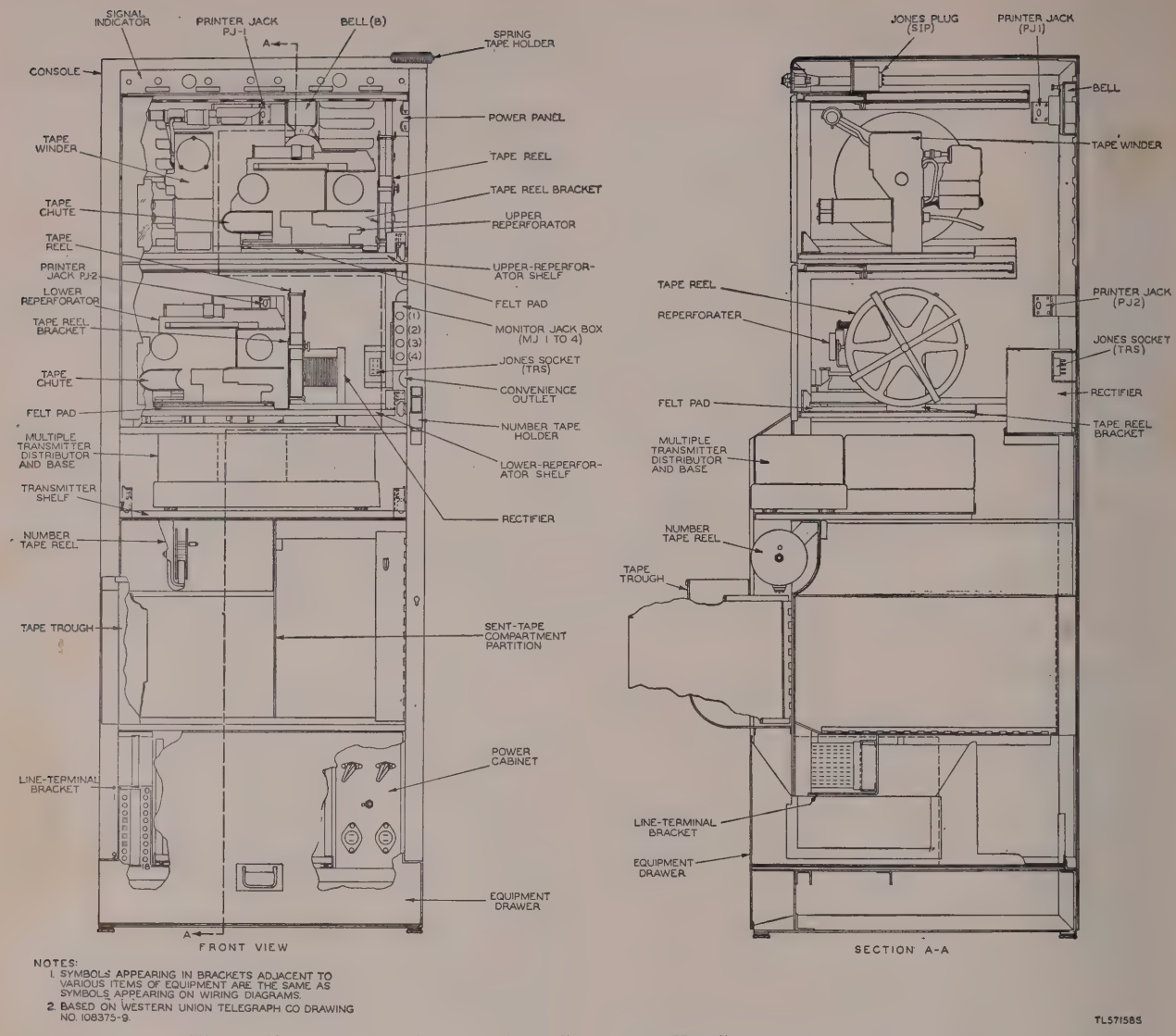

Figure 18. Teletypewriter Set AN/TGC–1 (or AN/TGC–1A) equipment assembly.

final electrical connections that have to be made before actual operation is started.

a. The equipment drawer (fig. 19) should be set in front of the console (fig. 4) and 27-pin plug P1, 30-pin plug P2, and the power plug, plugged into their respective sockets. After this has been accomplished the equipment drawer can be raised onto its slides and pushed back into position.

b. Slide the multiple transmitter distributor shelf out and place the multiple transmitter distributor and base on it.

c. Plug the 8-pin signal and magnet-control circuit plug and the power plug of the multiple transmitter distributor into their respective sockets (Jones socket (TRS), fig. 18, and XTR outlet, fig. 20).

d. Pull the receiving (lower) typing reperforator shelf out. Plug the input and output plugs for the 54A rectifier (fig. 21) into their respective sockets (rectifier a-c outlet and rectifier d-c outlet, fig. 20).

e. Set the receiving typing reperforator on its shelf. Plug the motor and signal plugs of the receiving typing reperforator into the power socket (lower reperforator outlet, fig. 20), and lower printer jack PJ–2 (fig. 18), respectively. Position the tape chute (figs. 18 and 22) of the receiving typing reperforator so that it will deflect the tape forward. Slide the shelf back into position.

f. Pull out the shelves supporting the receiving (lower) typing reperforator and the multiple transmitter distributor to their fullest extent so as

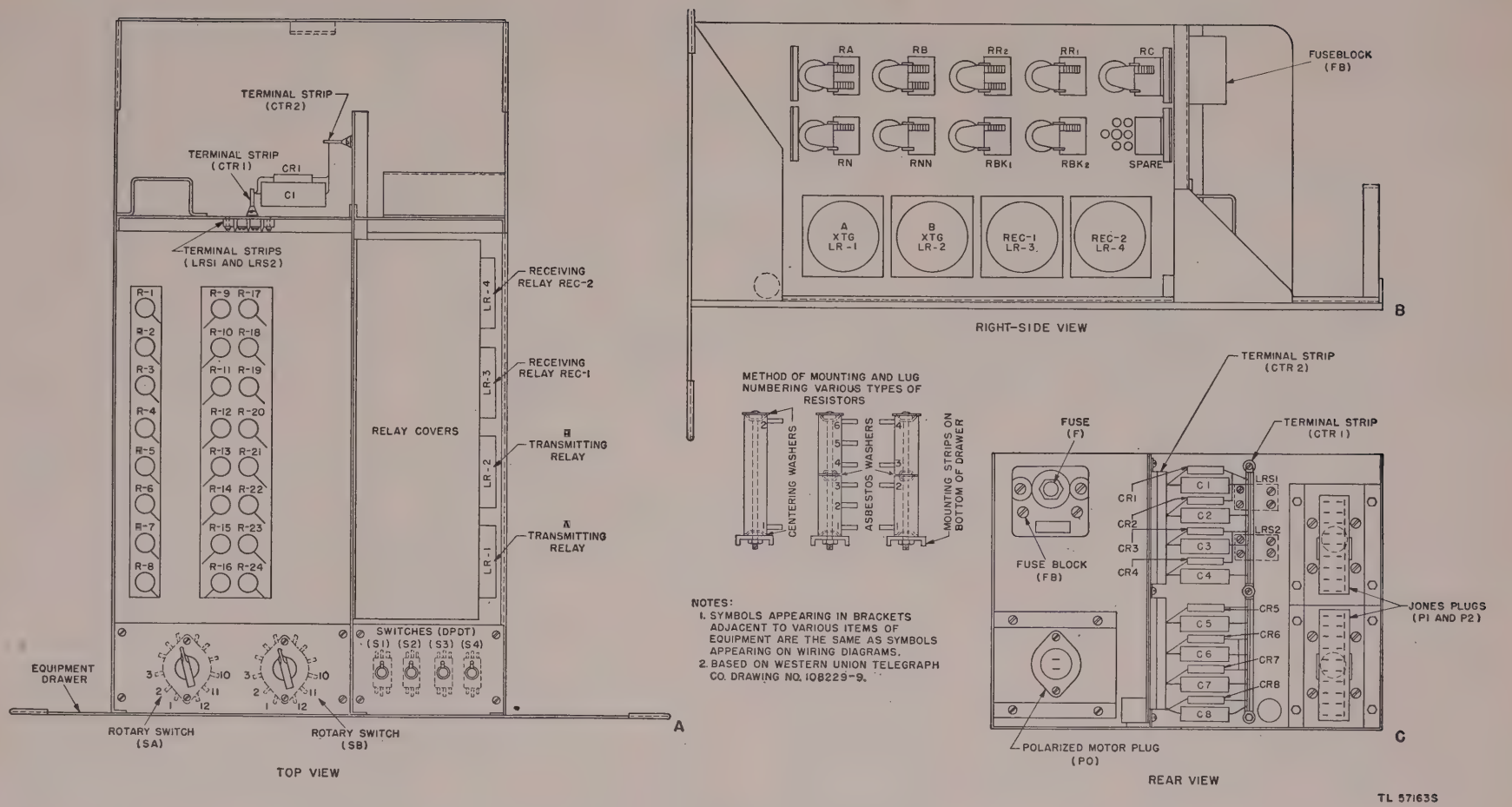

Figure 19. Equipment drawer assembly.

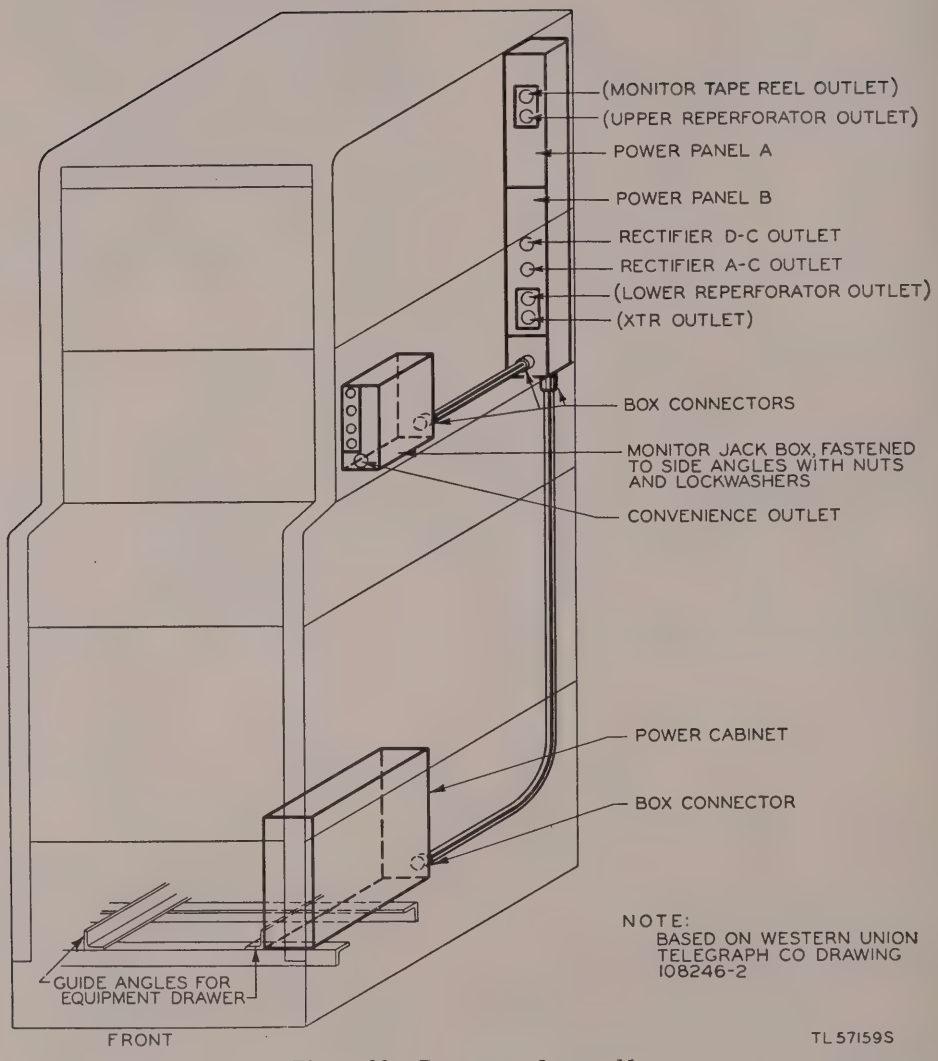

Figure 20. Power panel assembly.

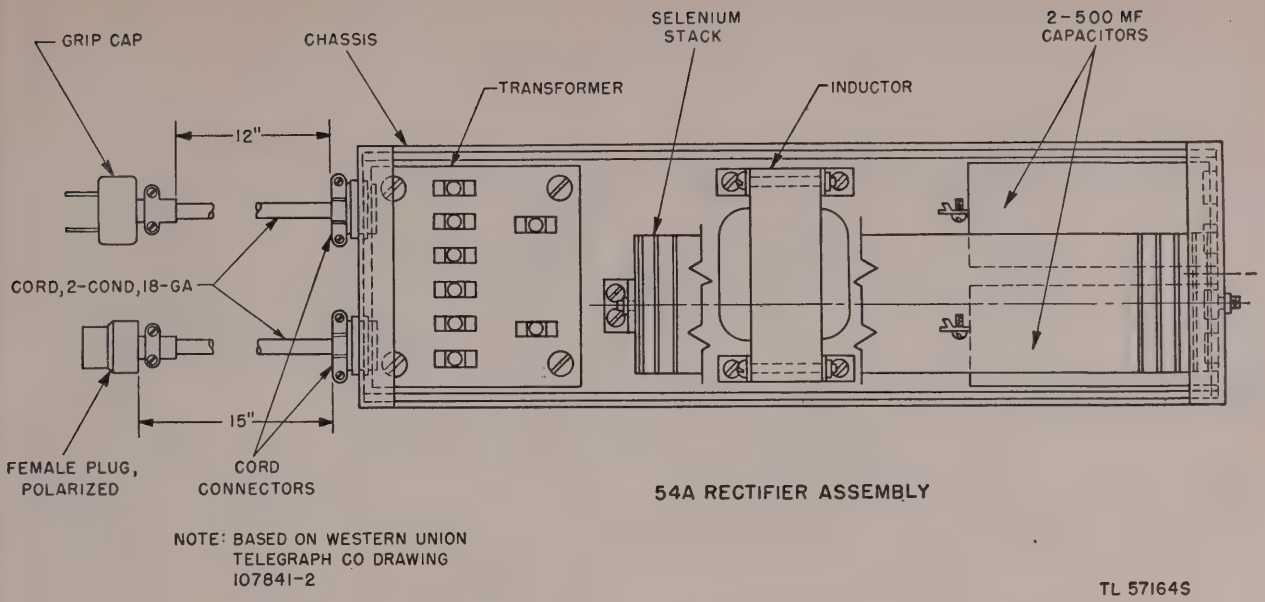

Figure 21. 54A rectifier assembly.

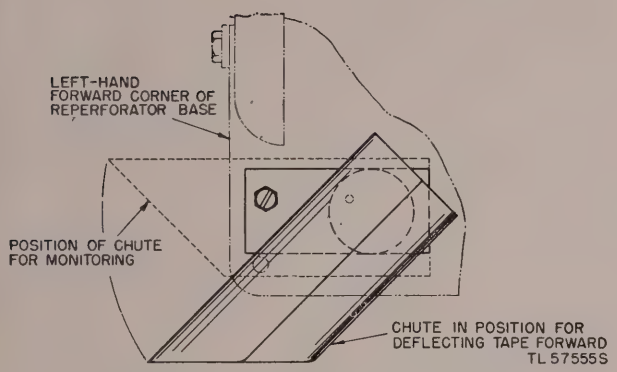
LEFT-HAND FORWARD CORNER OF REPERFORATOR BASE
POSITION OF CHUTE FOR MONITORING
CHUTE IN POSITION FOR DEFLECTING TAPE FORWARD
TL 57555S

Figure 22. Positioning of tape chute.

to expose the top edge of the baffle between the number-tape bin and the message-tape bin. With the irregular end of the baffle extension plate facing the rear of the cabinet, fit the slotted edge of the tape baffle to the top edge of the existing baffle and slide the extension toward the rear until it is completely seated. The existing baffle slopes downward and to the left. The extension is vertical with its top edge adjacent to the number-tape transmitter. Push the receiving typing reperforator shelf back to its normal position.

g. Set the monitor (upper) typing reperforator on its shelf. Plug the motor and signal plugs of the monitor typing reperforator into the power socket (upper reperforator outlet, fig. 20) and upper printer jack PJ–1 (fig. 18), respectively. Position the tape chute (fig. 22) of the monitor typing reperforator so that it will allow the tape to pass straight through. Plug the tape-winder motor plug into the monitor tape-reel outlet (fig. 20). Slide the shelf back into position.

h. Plug the 27-pin plug attached to the signal indicator panel into the socket at the top of the console. Place the signal indicator assembly (fig. 23) in position and fasten by means of the screws provided.

Ref. symbol	*Name and description of part*
A, B, REC–1, REC–2.	Relays, WECo No. 255A.
C1 to C8	Capacitor, 0.2 mf.
CR1 to CR8	Resistor, 1,000 ohms.
CTR1 and 2	Terminal strip (Jones No. 2012).
FB	Fuse block with 1.6-amp fuse.
LRS1 and 2	Terminal strip (Jones No. 2–141).
P1	Plug (Jones No. P–327–AB).
P2	Plug (Jones No. P–330–AB).
P0	Polarized motor plug (Hubbell No. 9808).
RA and RB	Relay, 0.018 amp. 140–1,300 ohms.
RBK1	Relay, 0.005 amp. 2,250 ohms.
RBK2	Relay, 0.01 amp. 2,000 ohms.
RC	Relay, 0.018 amp, 1,250–1,300 ohms.
RN	Relay, 0.014 amp, 550 ohms.
RNN	Relay, 0.0085 amp. 2,000 ohms.
RR1	Relay, 0.0135 amp, 550 ohms.
RR2	Relay, 0.022 amp, 140–1,300 ohms.
R1, R2, R9, R10	Resistor, 3,000 ohms, center-tapped.
R3, R4, R17, R18	Resistor, 250 ohms.
R5	Resistor, 4,000 ohms, center-tapped.
R6	Resistor, 2,000 ohms, center-tapped.
R7, R8	(Spare positions).
R11	Resistor, 1,800 ohms, tapped at 800 ohms.
R12	Resistor, 1,800 ohms.
R13	Resistor, 1,300 ohms.

Ref. symbol	Name and description of part
R14	Resistor, top 800 ohms; bottom 1,500 ohms.
R15	Resistor, top 3,000 ohms, center-tapped; bottom 4,000 ohms, center-tapped.
R16	Resistor, top 1,000 ohms, center-tapped; bottom 2,000 ohms, center-tapped.
R19	Resistor, top 2,000 ohms, center-tapped; bottom 4,000 ohms, center-tapped.
R20, R21	(Spare positions).
R22, R23	Resistor, 2,000 ohms.
R24	Resistor, top 200 ohms; bottom 3,000 ohms.
S1 to S4	Switch, toggle, DPDT.
SA	Switch, rotary.
SB	Switch, rotary.

23. Disassembly and Repacking

a. Disassembly. Remove the teletypewriter set from service and disconnect or remove all wiring and cording. The teletypewriter set is disassembled in the reverse order it was assembled (par. 22).

b. Repacking for Shipment. The exact procedure for repacking for shipment will depend upon the material available and the conditions under which the equipment is to be shipped. The unpacking instructions given in paragraphs 18 and 19 will be followed in the reverse order.

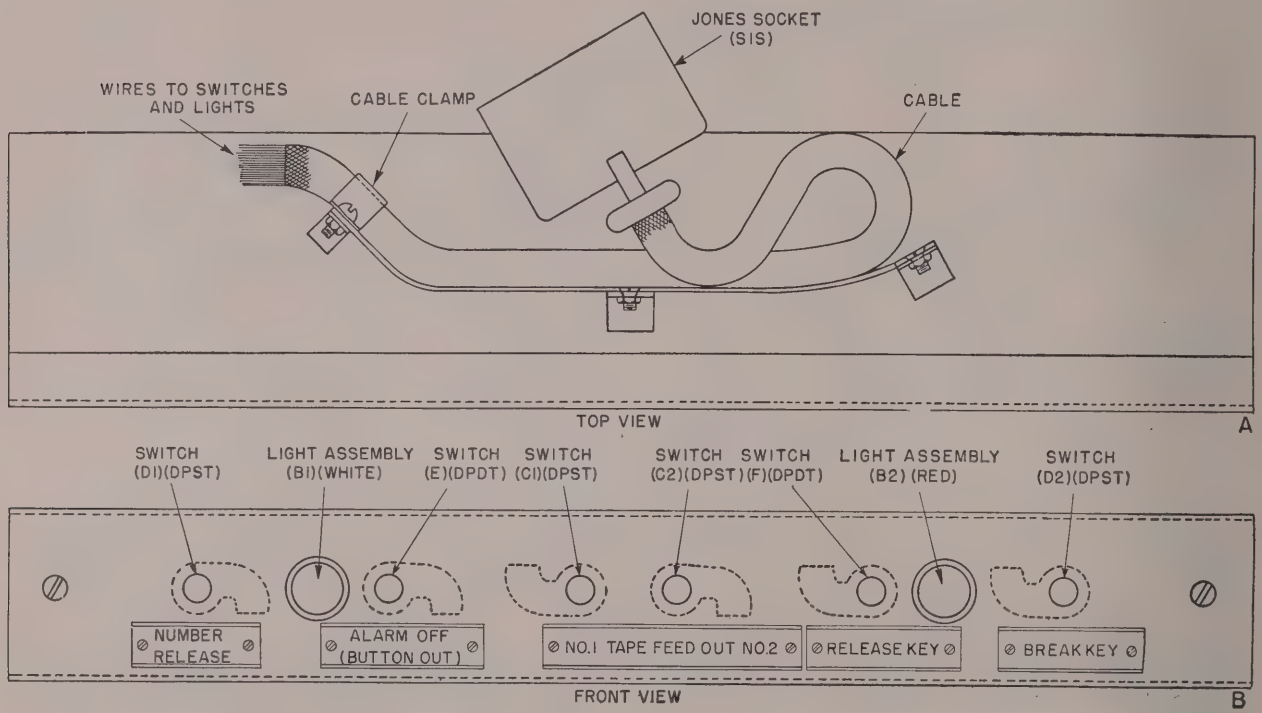

NOTES:
1. SYMBOLS APPEARING IN BRACKETS ADJACENT TO VARIOUS ITEMS OF EQUIPMENT ARE THE SAME AS SYMBOLS APPEARING ON WIRING DIAGRAMS.
2. BASED ON WESTERN UNION TELEGRAPH COMPANY DRAWING NO. 108233-3.

TL57162S

Figure 23. Signal indicator assembly.

PART TWO

OPERATING INSTRUCTIONS

Note. For information on destroying this equipment to prevent enemy use, see the destruction notice at the front of this manual.

Section IV. EQUIPMENT CONNECTIONS

Note. The instructions in this section are limited to general information which applies to the more common uses of teletypewriter sets with other equipment and those connections which are required to test the equipment when other equipment is not involved.

24. Ground and Power Supply Connections

a. Ground Connections. A ground is required at each teletypewriter set installation to minimize the hazard to equipment and personnel from lightning and other sources of high voltage, to reduce cross-fire interference, and to complete the d-c path for ground-return telegraph circuits. It is important that each item of equipment be connected to a low-resistance ground by conductors capable of carrying more than the maximum current which may come in contact with any part of the teletypewriter system. The ground-wire connection for Teletypewriter Sets AN/TGC–1 and AN/TGC–1A should be made to terminal 9 of the left section of the line terminal strip and should not be less than 14 gage in size.

b. Power Supply. The power supply for the teletypewriter sets should be 110- to 120-volt ac or dc. (If the tape-winder series-governed motor is replaced by a Barber-Colman induction-type motor (par. 111), the tape-winder motor will operate only from an a-c source.)

(1) *A-c supply.* There are two ac-dc switches on the power cabinet, both of which must be thrown to ac. In the governor circuit of the motors for the typing reperforators and multiple transmitter distributor, the 10-ohm and 300-ohm resistors must be shorted out. Figure 123, wiring diagram for the multiple transmitter distributor base, shows the shunt connected. The frequencies that may be used for an a-c power supply are 50- to 60-cycle.

(2) *D-c supply.* Both ac-dc switches must be thrown to dc. For d-c operation, remove the shunt from the 10-ohm and 300-ohm resistors (fig. 123).

c. Connections.

(1) Solder the flexible lead on the rectifier unit to the primary tap of the input transformer (fig. 121) which most nearly corresponds to the voltage of the power supply. Care must be taken that the grounded side of the power supply is previously connected to the grounded side of the teletypewriter set (the wide pin in the plug base in the power cabinet). This insures that the fuses will be on the live side of the power supply and that the console will be grounded.

(2) Terminal blocks LRS1 and LRS2, which are located in the equipment drawer, must be cross-connected according to the type of power supply to be used. Figure 24 shows the various cross-connecting arrangements; use insulated wire for the straps. If the external supply is dc and the live side is positive, strap block LRS1 straight across to block LRS2 as shown by the solid lines in figure 24. However, if the live side is negative, cross-connect the blocks as shown by the dotted lines in figure 24. If the external supply is ac and therefore the rectifier is used, cross-connect the blocks in the same manner as for dc with the live side positive, straight from block LRS1 to block LRS2.

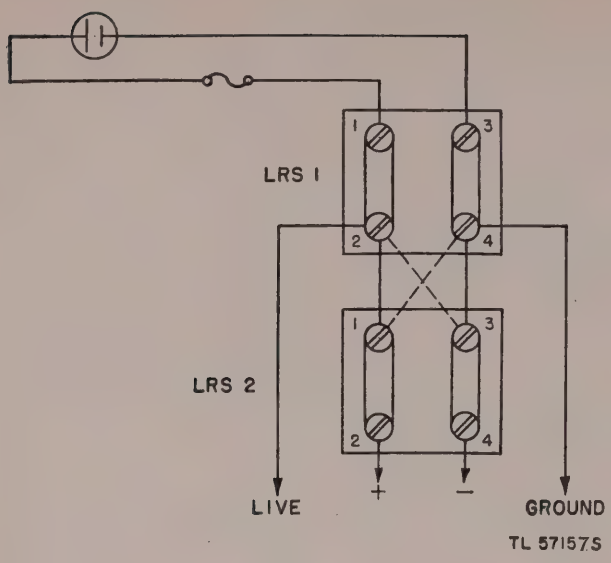

Figure 24. Cross-connections for terminal blocks LRS1 and LRS2.

Unless cross-connections are correct, certain circuits in the teletypewriter set will be reversed and the set will not function.

(3) A short length of flexible cord is provided with each teletypewriter set. This cord is equipped with a plug on one end and a socket on the other. The socket end plugs into the flush male base at the lower right-hand corner of the power cabinet. The plug end of the cord plugs into the room outlet for the power supply. With the power connected to the teletypewriter set and the main power switch in the power cabinet switched to ON, the transmitter distributor and reperforator motors should run.

(4) When several teletypewriter sets are arranged side-by-side, they may be connected to power by means of the short cords provided ((3) above) (fig. 37 (11)). The short cord for the second unit may be plugged into the flush male base (PO1) in the second unit and into the spare socket (PO2) of the first unit, and so on (fig. 125). By this means power may be connected to three units; since each unit may draw up to 5 amperes, not more than three units may be so connected or the short interconnecting cords will be overloaded.

25. Line Connections (fig. 25)

a. The type of connection made to the line will be determined by the type of operation to be used. Figure 25 is a schematic diagram of line connections corresponding to different conditions of operation. External connections at the line terminal strip are shown for each type of operation. As described in paragraph 3*j*, the line terminal strip consists of two sections, each of nine terminals, the left-hand section carrying terminals 1 to 9 and the right-hand section carrying terminals 10 to 18 (fig. 26). For convenience, the two sections are shown one above the other in figure 25. Plus and minus signs over individual wires of the loops indicate the polarity of current to insure correct operation of relays REC–1 and REC–2. Connections to the transmitting and receiving relays within the teletypewriter set are shown to the left of the connections for operation; switches S3 and S4 (POLAR MAKE-BREAK) are shown in the POLAR position.

b. When the power supply is ac and signaling battery therefore is supplied from the rectifier, the send and receive loops may be either metallic loops or single wires with ground return. When the power supply is dc with one side grounded, a ground-return circuit may not be used; circuits must be operated over metallic loops.

26. Line Connections for Normal Duplex Polar Operation (fig. 25)

External connections for working polar duplex to two external circuits, using separate send and receive loops or legs, are shown in the NORMAL DUPLEX POLAR column, figure 25. The send loop is connected to terminals 7 and 15 with straps as shown. With connections and straps as shown, signaling battery is connected to the marking and spacing contacts of the B transmitting relay. Negative battery is used for marking and positive battery for spacing.

a. Send Loop. The tongue of the B transmitting relay is connected to the line through the winding of REC–1, the monitor relay. The return line of the send loop is connected to the center of the 3,000-ohm center-tapped resistor.

b. Receive Loop. The receive loop is connected to terminals 16 and 17 of the line terminal strip and includes only the operating winding of REC–2, the receiving relay.

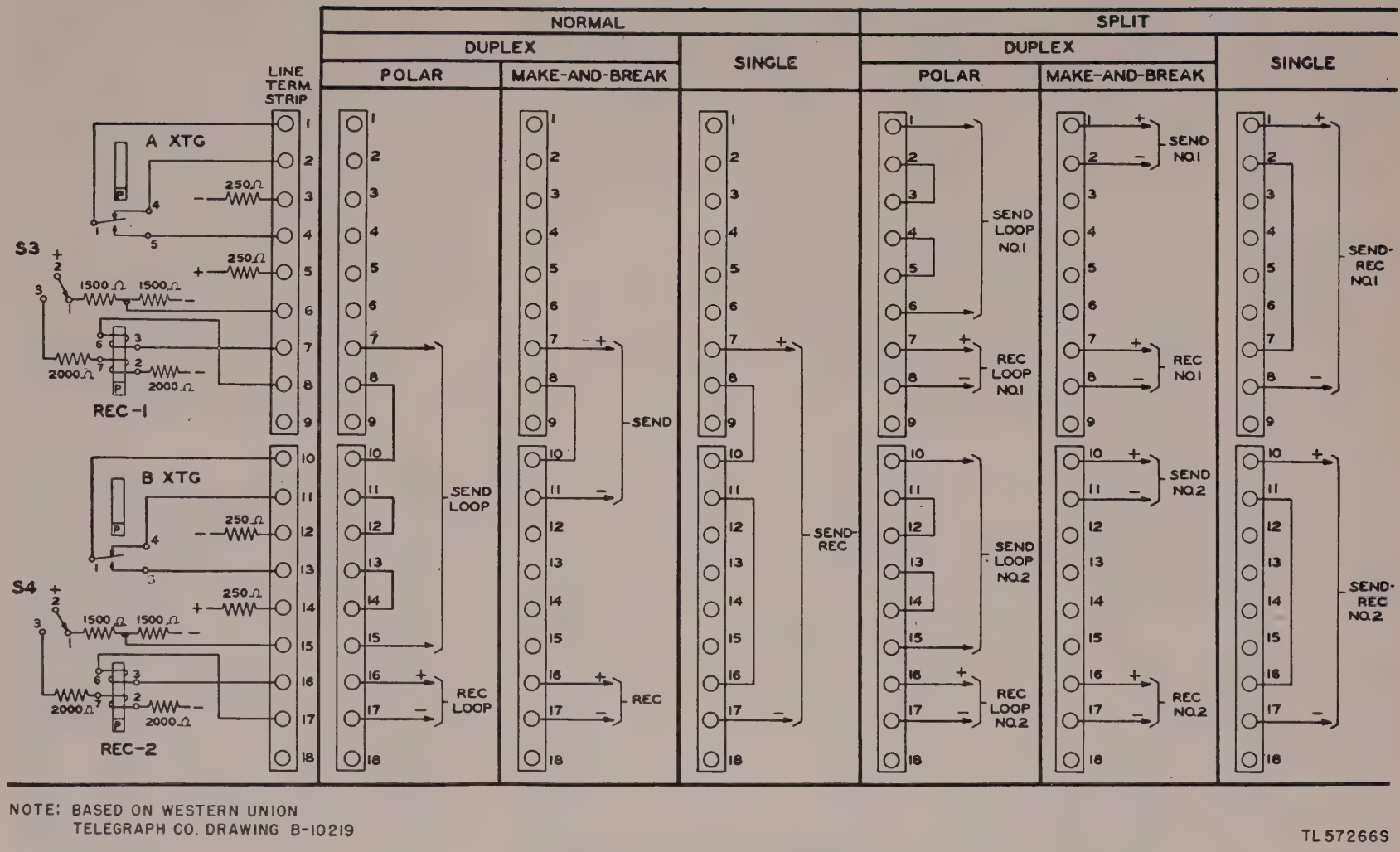

NOTE: BASED ON WESTERN UNION TELEGRAPH CO. DRAWING B-10219

TL57266S

Figure 25. Line terminal connections.

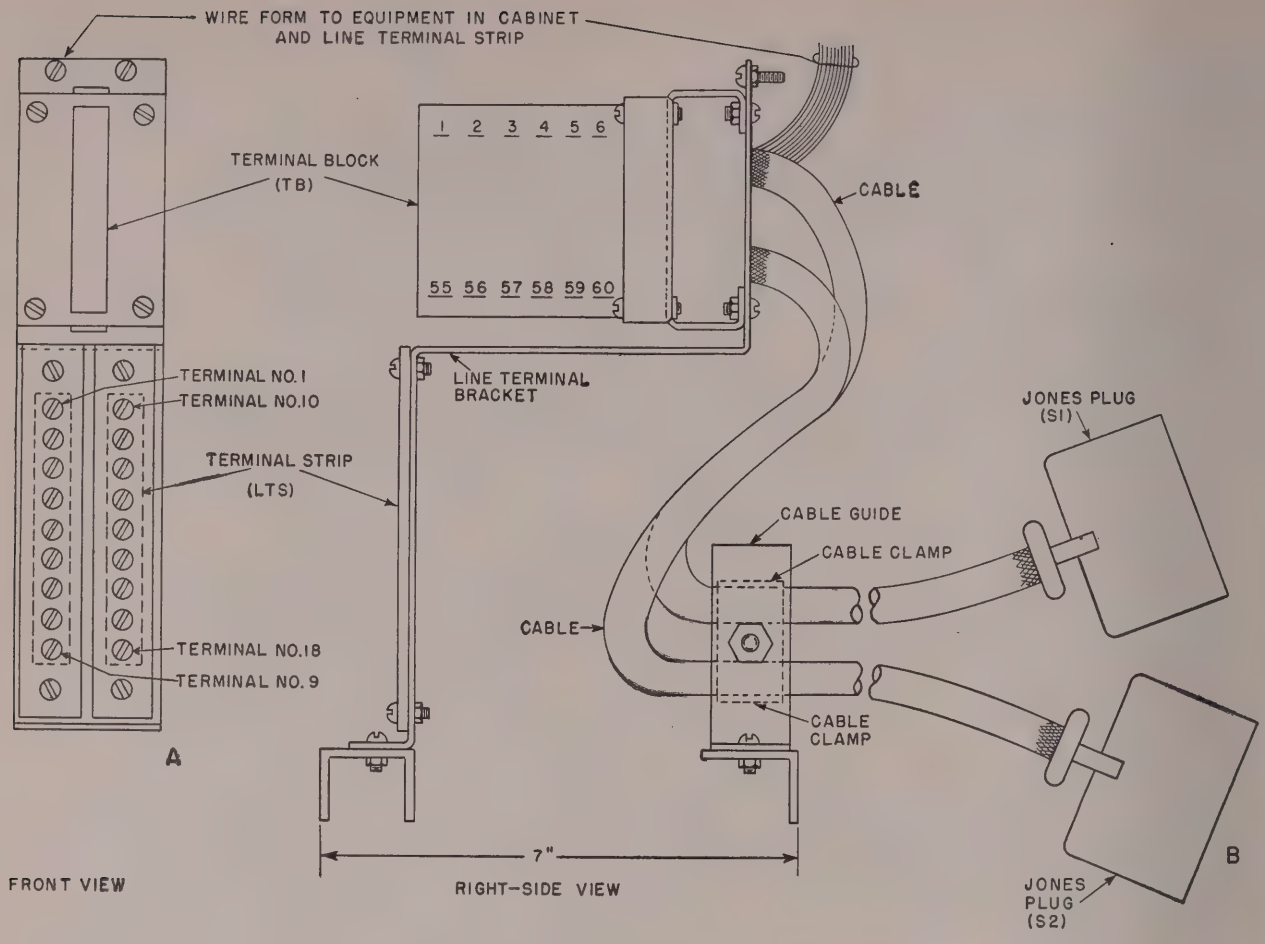

Figure 26. Line terminal bracket assembly.

27. Line Connections for Normal Duplex Make-and-Break Operation (fig. 25)

The connections for make-and-break duplex operation to two external circuits are shown in the NORMAL DUPLEX MAKE-AND-BREAK column, figure 25. Signaling battery is not supplied by the teletypewriter set; therefore the send and receive loops must be batteried externally.

a. Send Loop. The send loop is connected to terminals 7 and 11 with strap as shown. The loop includes the tongue and marking contact of the B transmitting relay and operating winding of REC–1, the monitor relay.

b. Receive Loop. The receiving loop is connected to terminals 16 and 17 of the line terminal strip and includes only the operating winding of REC–2, the receiving relay.

c. Switches S3 and S4. The POLAR MAKE-BREAK switches (S3 and S4) are thrown to MAKE-BREAK, breaking the center-tapped resistor circuit and completing the bias circuits for the two REC relays.

28. Line Connections for Normal Single Operation (fig. 25)

The connections for single operation to one external circuit are shown in the NORMAL SINGLE column (fig. 25). The single send-receive loop is connected to terminals 7 and 17, with straps as shown. The circuit includes the tongue

and marking contacts of the B transmitting relay and operating windings for both REC–1 and REC–2 relays.

29. Line Connections for Split Duplex Polar Operation (fig. 25)

The connections for polar duplex operation to four external circuits (SPLIT) are shown in the SPLIT DUPLEX POLAR column, figure 25.

a. Send Loop No. 1. The send loop is connected to terminals 1 and 6 with straps as shown. Signaling battery is connected to the marking and spacing contacts of the A transmitting relay, the tongue of which is connected to the line. The return line of the send loop is connected to the center of the 3,000-ohm center-tapped resistor, the POLAR MAKE-BREAK switch (S3) being thrown to POLAR.

b. Receive Loop No. 1. The receive loop is connected to terminals 7 and 8 and includes only the operating winding of the REC–1 relay.

c. Send Loop No. 2. The send loop is connected to terminals 10 and 15 with straps as shown. Signaling battery is connected to the marking and spacing contacts of the B transmitting relay, the tongue of which is connected to the line. The return line is connected to the center of the 3,000-ohm center-tapped resistor, the POLAR MAKE-BREAK switch (S4) being thrown to POLAR.

d. Receive Loop No. 2. The receive loop is connected to terminals 16 and 17 and includes only the operating winding of the REC–2 relay.

30. Line Connections for Split Duplex Make-and-Break Operation (fig. 25)

The connections for make-and-break duplex operation to four external circuits (SPLIT) are shown in the SPLIT DUPLEX MAKE-AND-BREAK column, figure 25. Signaling battery is not supplied by the teletypewriter set; therefore the send and receive loops must be batteried externally.

a. Send Loop No. 1. The send loop is connected to terminals 1 and 2 and includes only the tongue and marking contact of the A transmitting relay.

b. Receive Loop No. 1. The receive loop is connected to terminals 7 and 8 and includes only the operating winding of the REC–1 relay. The POLAR MAKE-BREAK switch (S3) is thrown to MAKE-BREAK.

c. Send Loop No. 2. The send loop is connected to terminals 10 and 11 and includes only the tongue and marking contact of the B transmitting relay.

d. Receive Loop No. 2. The receive loop is connected to terminals 16 and 17 and includes only the operating winding of the REC–2 relay. The POLAR MAKE-BREAK switch (S4) is thrown to MAKE-BREAK.

31. Line Connections for Split Single Operation (fig. 25)

The connections for single operation to two external circuits (SPLIT) are shown in the SPLIT SINGLE column, figure 25.

a. Send-receive Loop No. 1. The send-receive loop is connected to terminals 1 and 8 with strap as shown. The POLAR MAKE-BREAK switch (S3) is thrown to MAKE-BREAK.

b. Send-receive Loop No. 2. The send-receive loop is connected to terminals 10 and 17 with strap as shown. The POLAR MAKE-BREAK switch (S4) is thrown to MAKE-BREAK.

32. Connections to Other Equipment

Since Teletypewriter Set AN/TGC–1 (or AN/TGC–1A) receives messages in the form of code perforations and typewritten characters on tape, it may be desirable to make a page-printed copy of certain messages received at the teletypewriter relay station. The monitor jack box provides an easy way to connect teletypewriter page-printing equipment into any one or all of the circuits for this purpose.

a. Normal Duplex Operation. When the teletypewriter set is arranged for normal operation to two external circuits, a Teletypewriter TT–5/FG or similar teletypewriter equipment may be connected to the teletypewriter set through the monitor jack box. A teletypewriter set then can be arranged to provide a monitor page-printed copy of the messages being received on the lower typing reperforator by plugging the red (REC) plug of Teletypewriter TT–5/FG into the lower reperforator jack of the monitor jack box; a monitor page-printed copy of the outgoing messages being transmitted over the A or B message transmitter units by plugging the red (REC) plug of Teletypewriter TT–5/FG into the XTR–A or XTR–B jack of the monitor jack box, depending on which transmitter is sending; monitor page-printed copies of both the received and transmitted messages simul-

taneously, provided three Teletypewriters TT–5/FG are available, by plugging the individual red (REC) plugs of the three teletypewriters into the monitor jack box (one in the lower reperforator jack, one in the XTR–A jack, and the other in the XTR–B jack).

b. Split Duplex Operation. When the teletypewriter set is set up for split operation to four external circuits, a Teletypewriter TT–5/FG or similar teletypewriter equipment may be connected through the monitor jack box to provide monitor page-printed copies of messages being transmitted and received.

(1) To provide a monitor page-printed copy of messages being transmitted, it is necessary to have two teletypewriters available, one for monitoring transmitting circuit No. 1 and one for monitoring transmitting circuit No. 2. To monitor both transmitting circuits simultaneously, plug the red (REC) plugs of the two page-printing teletypewriters into the XTR–A and XTR–B jacks. It is possible to use only one Teletypewriter TT–5/FG and monitor either circuit No. 1 or circuit No. 2 depending on which circuit a monitor page-printed copy is desired.

(2) To provide a monitor page-printed copy of the messages being received, it will be necessary to have two Teletypewriters TT–5/FG available, one for monitoring receiving circuit No. 1 and one for monitoring receiving circuit No. 2. To monitor both receiving circuits simultaneously, plug the red (REC) plugs of the two teletypewriters into the upper and lower reperforator jacks. It is possible to use only one teletypewriter and monitor either receiving circuit No. 1 or No. 2, depending on which circuit a monitor page-printed copy is desired.

(3) It will be noted that it is possible therefore to provide simultaneously monitor page-printed copies of messages being transmitted and received on both circuits when four Teletypewriters TT–5/FG or similar page-printing teletypewriter equipment is available.

Section V. OPERATING CHECKS AND ADJUSTMENTS

33. Preoperational Equipment Adjustments

a. The adjustments listed below are made after connections described in section IV have been completed. All of the preoperational adjustments listed below must be completed prior to lining up the teletypewriter set with the set at the distant station.

b. Throw the main power switch to ON. The motors of the multiple transmitter distributor and the two typing reperforators should run. Throw the tape-winder switch to ON; the tape-winder motor should run.

c. When the power first is turned on, the red break lamp will light. To extinguish the light, press the RELEASE KEY button.

34. Installing Tape in Typing Reperforators

Place the roll of tape in the tape-reel container so that the tape unwinds from the bottom and toward the front of the typing reperforator. Pass the tape over the tape-tension spring roller, under the tape guide, through the tape chute and punch block, and between the feed roll and tape-tension lever. With the reperforator signal cord removed from its jack, exert a slight pressure on the tape-tension lever until the tape is fed out evenly. For a more detailed description of installing the tape in the typing reperforators, see TM 11–2223.

35. Installing Tape on Tape Winder (fig. 27)

To thread the monitor tape on the take-up reel of the tape winder, run the tape under the lower snubber and over the upper snubber, then between the two snubbers and to the left and under the lower snubber, and over the guide to the take-up reel. With the tape fed in this manner, the tape tension between the typing reperforator feed wheel and the snubbers is not great enough to cause errors. A piece of an adhesive tape (scotch tape, masking tape, adhesive tape, etc.) on the end of the monitor tape to fasten the monitor tape to the core of the take-up reel is a convenient method for starting the monitor tape on the take-up reel.

TELETYPEWRITER SETS AN/TGC–1, AN/TGC–1A, AN/TGC–1B AND AN/TGC–1C

TM 11–2203
TO 31W4–2TGC1–1
CHANGES No. 4

DEPARTMENTS OF THE ARMY AND
THE AIR FORCE
WASHINGTON 25, D. C., *12 December 1956*

TM 11–2203/TO 31W4–2TGC1–1, 10 March 1949, is changed as follows:

Page 1. Note (C 3). Add the following: The tape winders procured on Order No. 29780–Phila–56 are similar to the tape winder procurred on previous orders unless otherwise specified. The tape winders on this order are designed for use as a separate item of equipment and not as a component of Teletypewriter Set AN/TGC–1, AN/TGC–1A, AN/TGC–1B, or AN/TGC–1C. A motor control relay is mounted on top of the tape winder housing and permits control of the tape winder motor by an external 60-milliampere direct current circuit.

220.2. Replacement of Motor Control Relay on Tape Winder (Order No. 29780–Phila–56)

(Added)

The motor control relay (fig. 94.1 A) is sealed and cannot be adjusted. In the event of relay failure, replacement is necessary. Remove, replace, and test the operation of the new relay as follows:

a. Removal. Unsolder the wires from the relay terminals (fig. 94.1 B). Remove the nuts and lockwashers and remove the old relay from the relay mounting bracket.

b. Replacement. Mount the relay on the relay mounting bracket; use the old nuts and lockwashers. Solder the wires to the relay terminals.

c. Motor Control Circuit Test. Test the operation of the motor control circuit as follows:

(1) Insert plug P2 into a 115-volt 60-cycle ac power source (fig. 94.2).

(2) Insert plug P1 into a 60-milliampere 110-volt dc external control circuit.

(3) Move switch S1, mounted on the front of the tape winder, to the ON position.

(4) Energize the external control circuit. The tape winder motor should turn the tape reel.

(5) The tape winder motor should stop when the external control circuit is deenergized or switch S1 is moved to the OFF position.

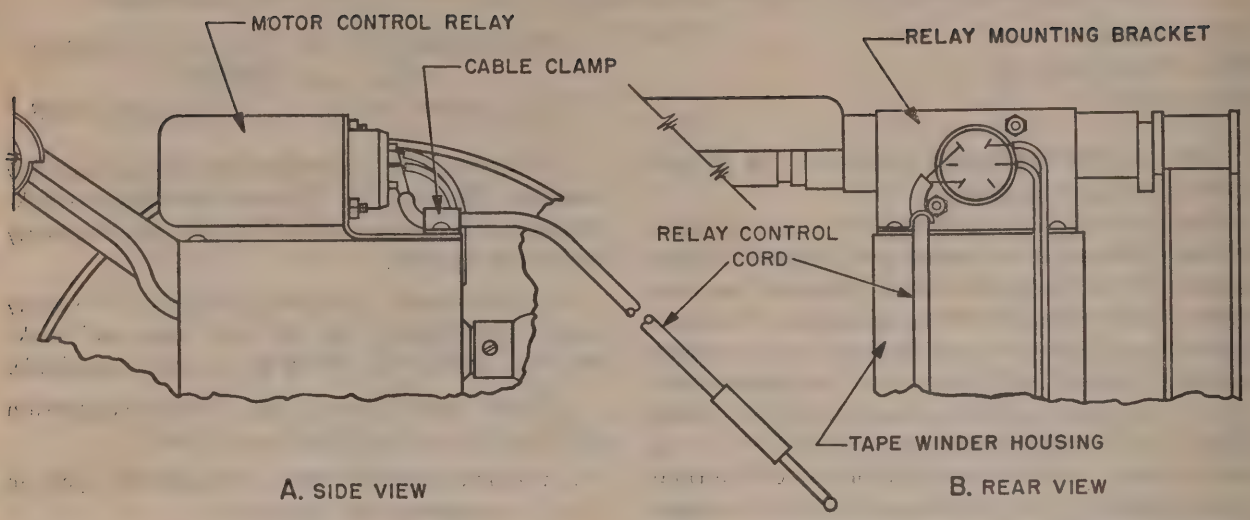

Figure 94.1. (Added) *Motor control relay mounting details (Order No. 29780–Phila–56).*

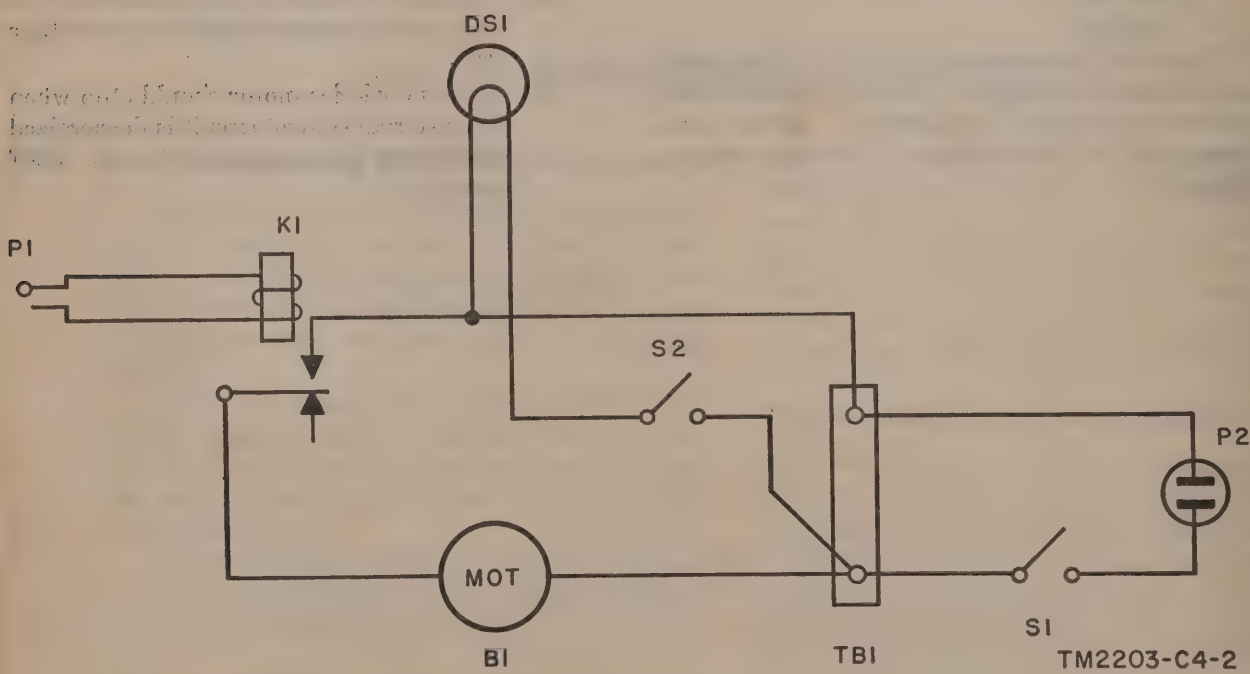

Figure 94.2. (Added) *Tape winder (Order No. 29780–Phila–56), schematic diagram.*

[AG413.52 (6 Dec 56)]

By order of the Secretaries of the Army and the Air Force:

MAXWELL D. TAYLOR,
General, United States Army,
Chief of Staff.

Official:
JOHN A. KLEIN,
Major General, United States Army,
The Adjutant General.

N. F. TWINING,
Chief of Staff, United States Air Force.

Official:
E. E. TORO,
Colonel, United States Air Force,
Air Adjutant General.

Distribution:
Active Army:

CNGB (1)	Gen Depots (2) except Atlanta Gen Depot (None)	5–312R (2)	8–667R (2)
ASA (3)		5–315R (2)	10–22R (2)
Tec Svc, DA (1) except CSIGO (30)		5–316R (2)	11–7C (2)
Tec Svc Bd (1)	Sig Sec, Gen Depots (10)	6–200C (2)	11–15C (2)
Hq CONARC (5)	Sig Depots (17)	6–201C (2)	11–16C (2)
CONARC Bd (Incl ea Test Sec) (1)	US Army Tng Cen (2)	6–225C (2)	11–18C (2)
	POE (OS) (2)	6–226C (2)	11–57C (2)
Army AA Comd (2)	Trans Terminal Comd (2)	6–235C (2)	11–97R (2)
OS Maj Comd (5)		6–236C (2)	11–127R (2)
OS Base Comd (5)	Army Terminals (2)	6–415R (2)	11–128C (2)
Log Comd (5)	OS Sup Agencies (2)	6–416R (2)	11–500R (2)
MDW (1)	Army Elct PG (1)	6–435R (2)	11–557G (2)
Armies (5)	Sig Fld Maint Shops (3)	6–501C (2)	11–587R (2)
Corps (2)	Sig Lab (5)	6–515R (2)	11–592R (2)
Ft & Cp (2)	ACS (3)	8–22C (2)	11–597R (2)
Sp Wpn Comd (2)	Mil Dist (1)	8–581R (2)	32–500R (2)
Army Cml Cen (4)	Units organized under following TOE's:	8–590R (2)	55–12R (2)
Gen & Br Svc Sch (5) except Sig Sch (25)	5–192C (2)		
	5–267R (2)		

NG: State AG (6); units—same as Active Army except allowance is one copy to each unit.
USAR: None.
For explanation of abbreviations used, see SR 320–50–1.

U. S. GOVERNMENT PRINTING OFFICE: 1956

DEPARTMENT OF THE ARMY TECHNICAL MANUAL AND DEPARTMENT OF THE AIR FORCE MANUAL

TELETYPEWRITER SETS AN/TGC–1, AN/TGC–1A, AN/TGC–1B, AND AN/TGC–1C

C3, TM 11–2203
TO 16–30TGC–5

DEPARTMENTS OF THE ARMY AND THE AIR FORCE
WASHINGTON 25, D. C., *23 March 1953*

TM 11–2203/AFM 102–2, 10 March 1949, is changed as follows:

The title of the manual is changed to read:

TELETYPEWRITER SETS AN/TGC–1, AN/TGC–1A, AN/TGC–1B, **AND AN/TGC–1C**

PART ONE

INTRODUCTION

Section I. DESCRIPTION

Note. (Superseded) Teletypewriter Sets AN/TGC–1, AN/TGC–1A, AN/TGC–1B, and AN/TGC–1C are the same except for the addition, in the AN/TGC–1B and AN/TGC–1C, of a motor-control feature and the further addition, in the AN/TGC–1C, of a relay assembly to the number transmitter of the multiple transmitter distributor. The motor-control feature allows certain motors to stand by before transmission and to start only when a message is being sent. The relay assembly in the AN/TGC–1C prevents coasting of the number tape after the unshift (letters) signal occurs. With the exception of paragraph 134, information applying to Teletypewriter Sets AN/TGC–1, AN/TGC–1A, and AN/TGC–1B also applies to Teletypewriter Set AN/TGC–1C unless otherwise indicated.

98. Number Transmitter Circuit

(figs. 41.1, 44, 45, **122.1,** and 129.1)

* * * * *

e. (Added) *Teletypewriter Set AN/TGC–1C.* In Teletypewriter Set AN/TGC–1C, a relay assembly has been added to the number transmitter of the multiple transmitter distributor to prevent coasting of the number tape after the unshift (letters) signal occurs.

122. POLAR MAKE-BREAK Switches S3 and S4

The POLAR MAKE-BREAK * * * the transmitting relays. In the MAKE-BREAK position, the center-tapped resistors are disconnected and the bias windings **of** relays REC–1 and REC–2 are **batteried.** In Teletypewriter **Sets** AN/TGC–1B, **and AN/TGC–1C, a 10,000-ohm** resistor R25 across terminals 1 and 3 of switch S3 holds REC–1 on spacing during polar operation when a break signal is received.

154. Repairing Multiple Transmitter Distributor and Base

* * * * *

d. (Added) In Teletypewriter Set AN/TGC–1C, no adjustments can be made to the relay which prevents coasting of the number tape because the relay is hermetically sealed.

In figure 129.1 "R25 1000" is changed to read R25 10,000.

TAGO 3146A—Mar. 200489°—53

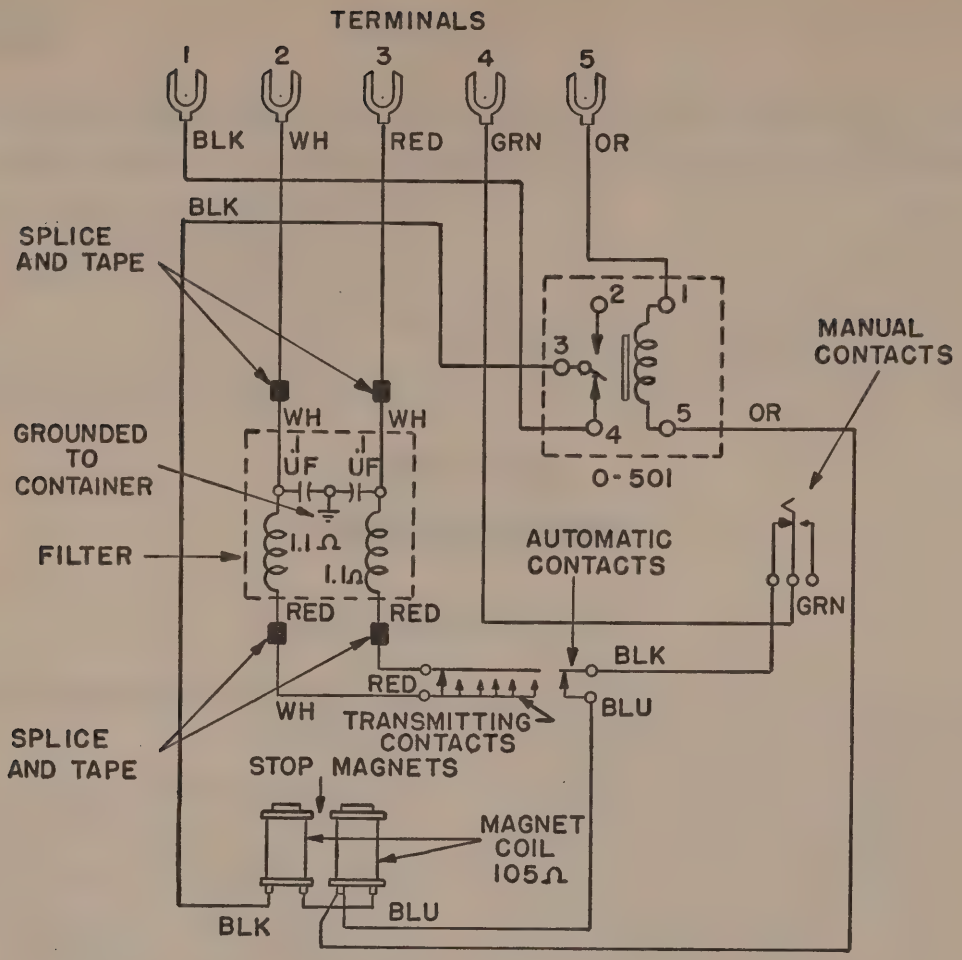

NOTE

UNLESS OTHERWISE SHOWN,
RESISTORS ARE IN OHMS,
CAPACITORS ARE IN UUF.

TM 2203-C3-1

Figure 122.1 (Added). *Relay in number transmitter of multiple transmitter distributor, Teletypewriter Set AN/TGC–1C, wiring diagram.*

APPENDIX II

PARTS IDENTIFICATION LISTS AND TABLES OF REPLACEABLE PARTS

* * * * * * *

7. Identification Table of Replaceable Parts for Teletypewriter Sets AN/TGC–1 and AN/TGC–1A

Fig. No. and Ref. symbol	Name of part and description	Function of part	Signal Corps stock No.
*	* * *	* *	*
	MISCELLANEOUS		
*	* * *	* *	*
	CONNECTOR, * * * #S–308–AB	Power * * * transmitter	2Z8639–15
S–1	CONNECTOR, plug: female; 27 flat cont blades; straight; 2 15/16" lg x 1 13/16" wd x 1⅛" d overall; Jones HB #S–327–CCT–L.	Ties * * * indicator	2Z8697.1
*	* * *	* *	*
	SIGNAL INDICATOR		
	CONTROL: * * * #108233–3	Alarm control	4T1000–1/C4
S1S	CONNECTOR, plug: female; 27 flat cont blades; straight; 2 15/16" lg x 1 13/16" wd x 1⅛" d overall; Jones HB #S–327–CCT–L.	Signal * * * connector	2Z8697.1
*	* * *	* *	*

8. Identification Table of Parts for Teletypewriter Sets AN/TGC–1B and AN/TGC–1C

* * * * * * *

Fig. No. and Ref. symbol	Name of part and description	Function of part	Signal Corps stock No.
*	* * *	* *	*
	MISCELLANEOUS GROUP		
*	* * *	* *	*
Fig. 4	JACK * * * dia	Used * * * box	4C4903.03A.1
C17	CAPACITOR, fixed: paper dielectric; 100,000 μμf +20%–10%; 600 v dc; JAN type CP54B4EF104.	Spark suppressor	3DA100–777
R32	RESISTOR, fixed: WW; 1,000 ohms ±10%; 1 w; JAN type RC31BF102K.	Spark suppressor	3RC31BF102K
	MULTIPLE TRANSMITTER DISTRIBUTOR		
*	* * *	* *	*
	PLATE, mounting	Hinged * * * mounting	4T110790
A501	BRACKET: rectangular; steel; 2½" lg x 1⅝" wd x 13/16" h o/a.	Relay bracket.	
O501	RELAY, armature: SPDT; normally open; 115 v dc (only in AN/TGC–1C).	To prevent coasting in the number transmitter unit.	2Z7587–269
E501	TERMINAL, lug: phosphor-bronze; tinned; ¾" lg x 11/32" wd x .020" thk (only in AN/TGC–1C).	For wire lead to mount on screw terminal.	3Z12073–41.26
*	* * *	* *	*

8. Identification Table of Parts for Teletypewriter Sets AN/TGC–1B and AN/TGC–1C—Continued

Fig. No. and Ref. symbol	Name of part and description	Function of part	Signal Corps stock No.
	RELAY CONTROL UNIT		
*	* * *	* *	*
R14 (top)------	RESISTOR * * * 16 w----------	Current * * * RB----------	3RW23705
CR1, CR2, CR3, CR4, CR5, CR6, CR7, CR8.	RESISTOR, fixed: comp; 1,000 ohms ±10%; 1 w.	Current limiters in spark suppressor circuit.	3RC31BF102K
R25----------	RESISTOR, fixed: comp; 10,000 ohms ±10%; 2 w.	Holds * * * operation---------	3RC42BF103K
R14 (bottom)---	RESISTOR, * * * 12 w----------	Limits * * current----------	3RW25508
SA----------	SWITCH, rotary: * * * 4¼'' lg o/a----------	NORMAL-SPLIT switch-------	3Z9825–39.9
R7----------	RESISTOR, fixed: WW; 2,000 ohms 5%; 27 w; CT.	Limits current to time delay relay.	3RW26158
*	* * *	* *	*

[AG 413.52 (27 Feb 53)]

BY ORDER OF THE SECRETARIES OF THE ARMY AND THE AIR FORCE:

OFFICIAL:
WM. E. BERGIN
Major General, USA
The Adjutant General

J. LAWTON COLLINS
Chief of Staff, United States Army

OFFICIAL:
K. E. THIEBAUD
Colonel, USAF
Air Adjutant General

HOYT S. VANDENBERG
Chief of Staff, United States Air Force

DISTRIBUTION:
Active Army:
Tech Svc (1); Tech Svc Bd (1); AFF Bd (ea Svc Test Sec) (1); AFF (5); AA Comd (2); OS Maj Comd (5); Base Comd (5); MDW (2); Log Comd (5); A (5); CHQ (2); FT (2); Sch (5) except 11 (25); PMS & T 11 (1); Gen Dep (2); Dep 11 (20) except Sig Sec, Gen Dep (10); Tng Div (2); POE (10), OSD (2); Lab 11 (5); Mil Dist (3); Field Maint Shops 11 (3); Two (2) copies to each of the following T/O & E's: 11–107; 11–127A; 11–128; 11–500 CA, CB, CC, CD; 11–587; 11–592; 11–597; 55–16.
NG: Same as Active Army, except one copy to each unit.
Army Reserve: Same as Active Army, except one copy to each unit.
For explanation of distribution formula see SR 310–90–1.

U. S. GOVERNMENT PRINTING OFFICE: 1953

DEPARTMENT OF THE ARMY TECHNICAL MANUAL AND DEPARTMENT OF THE AIR FORCE TECHNICAL ORDER

TELETYPEWRITER SETS AN/TGC-1, AN/TGC-1A, AND AN/TGC-1B

C 2, TM 11-2203

DEPARTMENTS OF THE ARMY AND THE AIR FORCE
WASHINGTON 25, D. C., *29 November 1951.*

TM 11-2203/AFM 102-2, 10 March 1949, is changed as follows:

The title of the manual is changed to read: TELETYPEWRITER SETS AN/TGC-1, AN/TGC-1A, **AND AN/TGC-1B**

PART ONE

INTRODUCTION

Section I. DESCRIPTION

Note. (Added) Teletypewriter Set AN/TGC-1B is the same as Teletypewriter Sets AN/TGC-1 and AN/TGC-1A, except for the addition of a motor-control feature which allows certain motors to stand by without running before transmission and to start only when a message is being sent. With the exception of paragraph 134, information applying to Teletypewriter Sets AN/TGC-1 and AN/TGC-1A also will apply to Teletypewriter Set AN/TGC-1B, unless otherwise indicated.

1. General

a. Teletypewriter Sets AN/TGC-1, AN/TGC-1A, **and AN/TGC-1B** are complete teletypewriter sets designed for use in comcenters (communications **centers**) and tape-relay stations. Each unit includes * * * receiving and monitoring). **In addition, Teletypewriter Set AN/TGC-1B incorporates a motor-control feature which allows certain motors to stand by without running.**

* * * * *

k. (Added) Teletypewriter Set AN/TGC-1B is arranged so that the motors of all components used during transmission stand by without running before transmission and start only when a message is to be sent. A time delay of about 1.3 seconds occurs between release of the message transmitter start lever and the beginning of transmission to allow these motors to reach full operating speed.

2. Table of Components

Listed below are * * * or domestic shipment).

Quantity	Component	Approx. weight (lb.)	Width (in.)	Length (in.)	Height (in.)
1	Cabinet, console-type	250	24	24	65
	*	*	*	*	*
1	Signal indicator panel	20	5	21	1¾
1	**Motor-control, time-delay relay panel (AN/TGC-1B only).**	**15½**	**6**	**10¾**	**6¾**

3. Description of Teletypewriter Sets AN/TGC-1, AN/TGC-1A, and AN/TGC-1B

Teletypewriter Set AN/TGC-1 * * * and power cabinet.

* * * * *

g.1 (added) MOTOR-CONTROL, TIME-DELAY RELAY PANEL (TELETYPEWRITER SET AN/TGC-1B). The motor-control, time-delay relay panel of Teletypewriter Set AN/TGC-1B is mounted on the transmitter distributor shelf behind the number and A transmitters. The relay panel

contains three motor-control relays which start and stop the tape winder motor, the upper reperforator motor, and the transmitter distributor motor. In addition, a time-delay relay connected in each of the three transmitter circuits allows each motor to reach full operating speed before transmission begins. In split operation, the upper reperforator is used for receiving. When the NORMAL-SPLIT switch on the relay panel is operated to SPLIT the upper reperforator motor runs continuously and the tape winder motor does not run.

* * * * *

4. Packaging Data for Export Shipment

a. Each Teletypewriter Set * * * 40 cubic feet.

Teletypewriter Sets AN/TGC–1 and AN/TGC–1A

Item	Outside dimensions (in.)	Volume (cu. ft.)	Gross weight (lb.)
Transmitter distributor and tape winder.	34½ x 26½ x 16½.	8. 72	192
* *	*	*	*
Equipment drawer, rectifier, etc.	37½ x 33½ x 27½.	20. 00	240

Teletypewriter Set AN/TGC–1B (Added)

Item	Outside dimensions (in.)	Volume (cu. ft.)	Gross weight (lb.)
Console cabinet	74 x 33 x 30½	43	425
Equipment drawer	42½ x 42½ x 35½.	37. 10	350
Tape winder, signal indicator unit, tape trough, rectifier, cords and cables, small parts.	42½ x 30½ x 20½.	15. 40	215
Transmitter distributor	33 x 33 x 19½	12. 30	160
Reperforators (2)	51½ x 28½ x 27	23	300

* * * * *

6. System Application

* * * * *

d. (Added) The system application of Teletypewriter Set AN/TGC–1B is the same as that of Teletypewriter Sets AN/TGC–1 and AN/TGC–1A when the switch located on the motor-control, time-delay relay panel is positioned to conform with operating conditions.

Figures 6, 7, and 8 apply to Teletypewriter Set AN/TGC–1B as well as to Teletypewriter Sets AN/TGC–1 and AN/TGC–1A. For Teletypewriter Set AN/TGC–1B, add the following statement to the figure captions: Set the NORMAL-SPLIT switch on the motor-control, time-delay relay panel to NORMAL.

Figures 9, 10, and 11 apply to Teletypewriter Set AN/TGC–1B as well as to Teletyepwriter Sets AN/TGC–1 and AN/TGC–1A. For Teletypewriter Set AN/TGC–1B, add the following statement to the figure captions: Set the NORMAL-SPLIT switch on the motor-control, time-delay relay panel to SPLIT.

22. Installation of Teletypewriter Sets AN/TGC–1, AN/TGC–1A, and AN/TGC–1B

(fig. 18)

The teletypewriter set * * * plugged into it. Where no markings appear on the receptacles, refer to the wiring diagram (figs. 118 through **126.1**) for the particular equipment involved. The following information * * * operation is started.

* * * * *

c.1 (Added) When installing Teletypewriter Set AN/TGC–1B, place the motor-control, time-delay relay panel on the distributor shelf behind the number transmitter and fasten it underneath with the metal strap provided. Plug Jones plugs TDP and MCP (fig. 18.2) into their respective outlets, TDS and MCS (figs. 18.1 and 20.1). Open the lid on the top of the transmitter distributor and run in the three-conductor transmitter cable next to the other transmitter cords. Connect the three leads under the No. 5 screw terminals of each transmitter (figs. 18.2 and 126.2).

* * * * *

h. Plug the 27-pin * * * the screws provided.

Ref. symbol	*Name and description of part*
A, B, REC–1, REC–2.	Relays, WECo No. 255A.
* * * * *	
R6	Resistor, 2,000 ohms, center-tapped.
R7	**Spare position (AN/TGC–1 and AN/TGC–1A).**
R7	**Resistor, 2,000 ohms, center-tapped (AN/TGC–1B).**
R8	**Spare position.**
R11	Resistor, 1,800 ohms, tapped at 800 ohms.

* * * * *

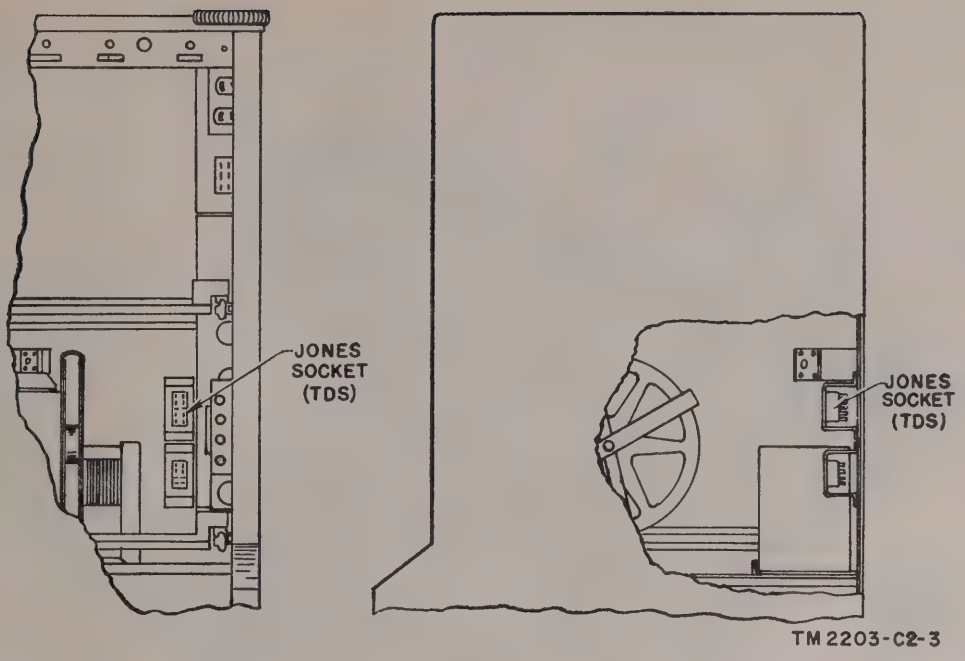

Figure 18.1 (Added) *Teletypewriter Set AN/TGC–1B, showing location of Jones socket TDS.*

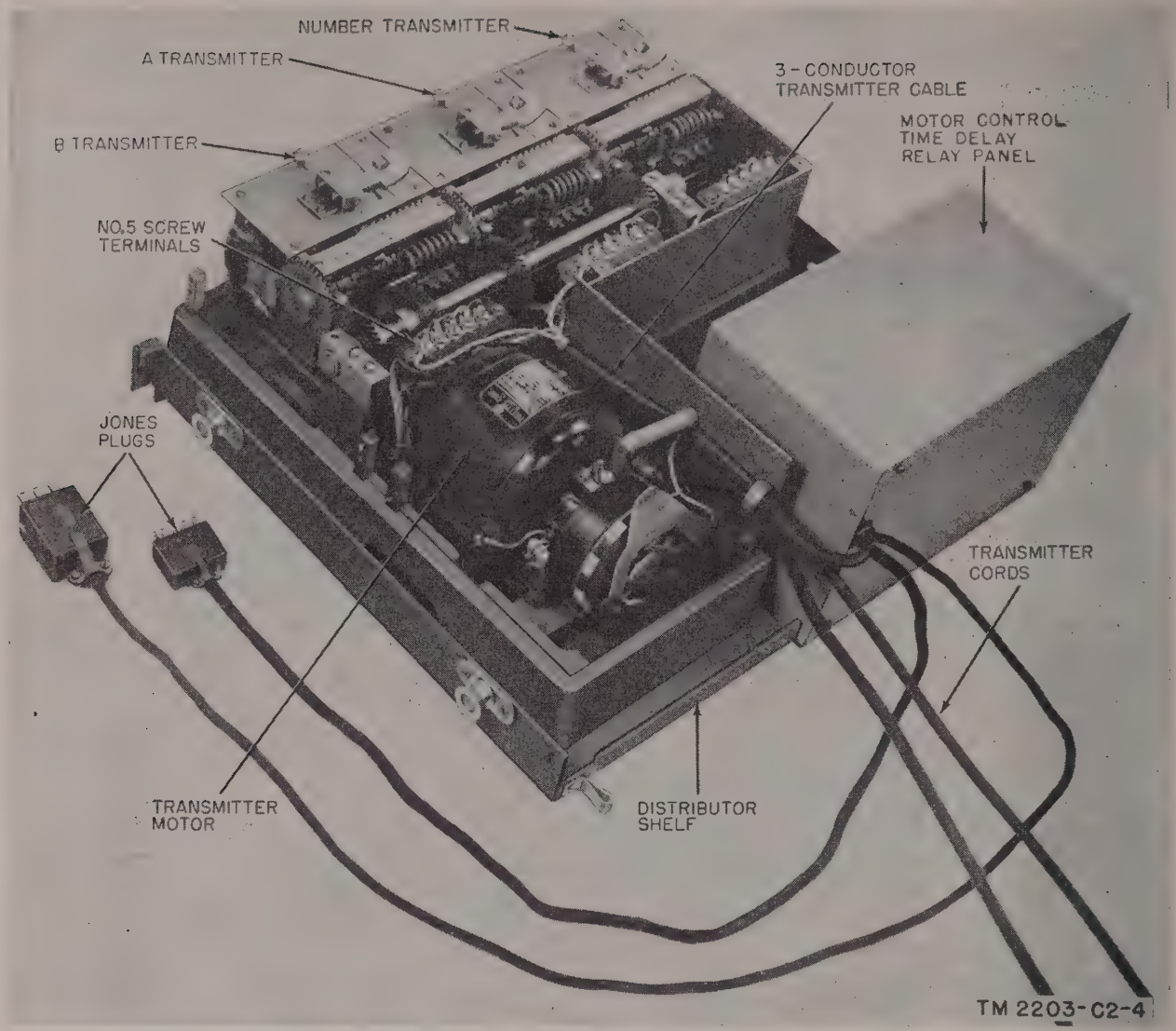

Figure 18.2 (Added) *Teletypewriter Set AN/TGC–1B, multiple transmitter, showing location of motor-control, time-delay relay panel, and associated cords.*

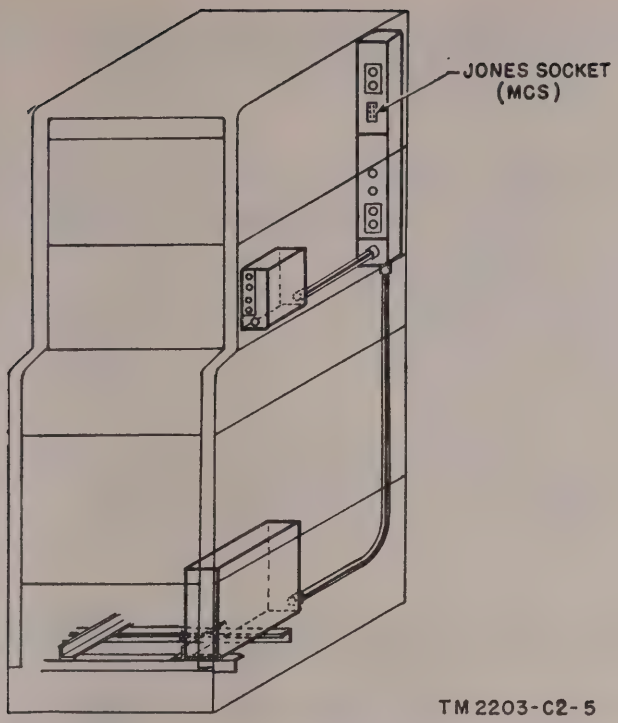

Figure 20.1 (Added) *Teletypewriter Set AN/TGC–1B, showing location of Jones socket MCS.*

33. Preoperational Equipment Adjustments

* * * * *

b. Throw the main power switch to ON. **On Teletypewriter Sets AN/TGC–1 and AN/TGC–1A, the** motors of the multiple transmitter distributor and the two typing reperforators should run. Throw the tape-winder * * * motor should run.

b.1 (Added) On Teletypewriter Set AN/TGC–1B, throw the toggle switch on the motor-control, time-delay panel to either SPLIT or NORMAL to correspond with the type of operation to be used. In normal operation, the transmitter motor, the upper monitor reperforator motor, and the tape-winder motor will remain stopped until a message is transmitted. In split operation, the motor of the upper reperforator, which is used for receiving, will run continuously and the tape-winder motor will not run. As in normal operation, the transmitter motor will run only when a message is being sent.

* * * * *

40. Local Operating Test

a. To make the * * * proceed as follows:

* * * * *

(3) Throw the NORMAL * * * (S3 and S4) to POLAR. **On Teletypewriter Set AN/TGC–1B, operate the NORMAL-SPLIT switch on the motor-control, time-delay relay panel to NORMAL.**

* * * * *

41. Starting Teletypewriter Sets AN/TGC–1, AN/TGC–1A, and AN/TGC–1B

With the source * * * the ON position. **On Teletypewriter Sets AN/TGC–1 and AN/TGC–1A, the** typing reperforator motors and the multiple transmitter distributor motor should run. Throw the tape-winder * * * motor should run. **Teletypewriter Set AN/TGC–1B will function as described in paragraph 33b.1.**

44. Setting Conditioning Switches for Normal Duplex Polar Operation

a. For operating normal * * * the following positions:

Switch	*Position*
NORMAL SPLIT	NORMAL.
* * * * *	
OPR. NON-OPR. NO. 2	OPR.
NORMAL-SPLIT (AN/TGC–1B motor-control, time-delay relay panel).	**NORMAL.**

* * * * *

45. Setting Conditioning Switches for Normal Duplex Make-and-Break Operation

a. For operating normal * * * drawer as follows:

Switch	*Position*
NORMAL SPLIT	NORMAL.
* * * * *	
OPR. NON-OPR. NO. 2	OPR.
NORMAL-SPLIT (AN/TGC–1B motor-control, time-delay relay panel).	**NORMAL.**

* * * * *

46. Setting Conditioning Switches for Normal Single Operation

a. For operating single * * * drawer as follows:

Switch	*Position*
NORMAL SPLIT	NORMAL.
* * * * *	
OPR. NON-OPR. NO. 2	OPR.
NORMAL-SPLIT (AN/TGC–1B motor-control, time-delay relay panel).	**NORMAL.**

* * * * *

47. Setting Conditioning Switches for Split Duplex Polar Operation, Circuit No. 1

a. For operating split * * * the following positions:

Switch	*Position*
NORMAL SPLIT	SPLIT.
* * * * *	
OPR. NON-OPR. NO. 1	OPR.
NORMAL-SPLIT (AN/TGC–1B motor-control, time-delay relay panel).	**SPLIT.**

Note. The position of * * * that circuit (par. 50).

* * * * *

48. Setting Conditioning Switches for Split Duplex Make-and-Break Operation, Circuit No. 1

a. For operating split * * * the following positions:

Switch	*Position*
NORMAL SPLIT	SPLIT.
* * * * *	
OPR. NON-OPR. NO. 1	OPR.
NORMAL-SPLIT (AN/TGC–1B motor-control, time-delay relay panel).	**SPLIT.**

* * * * *

49. Setting Conditioning Switches for Split Single Operation, Circuit No. 1

a. For operating single * * * the following positions:

Switch	*Position*
NORMAL SPLIT	SPLIT.
* * * * *	
OPR. NON-OPR. NO. 1	OPR.
NORMAL-SPLIT (AN/TGC–1B motor-control, time-delay relay panel).	**SPLIT.**

* * * * *

50. Setting Conditioning Switches for Split Duplex Polar Operation, Circuit No. 2

a. For operating split * * * the following positions:

Switch	*Position*
NORMAL SPLIT	SPLIT.
* * * * *	
OPR. NON-OPR. NO. 2	OPR.
NORMAL-SPLIT (AN/TGC–1B motor-control, time-delay relay panel).	**SPLIT.**

* * * * *

51. Setting Conditioning Switches for Split Duplex Make-and-Break Operation, Circuit No. 2

a. For operating split * * * the following positions:

Switch	*Position*
NORMAL SPLIT	SPLIT.
* * * * *	
OPR. NON-OPR. NO. 2	OPR.
NORMAL-SPLIT (AN/TGC–1B motor-control, time-delay relay panel).	**SPLIT.**

* * * * *

52. Setting Conditioning Switches for Split Single Operation, Circuit No. 2

a. For operating single * * * the following positions:

Switch	*Position*
NORMAL SPLIT	SPLIT.
* * * * *	
OPR. NON-OPR. NO. 2	OPR.
NORMAL-SPLIT (AN/TGC–1B motor-control, time-delay relay panel).	**SPLIT.**

* * * * *

55. Emergency Operation

* * * * *

e. (Added) If the motor-control, time-delay relay panel of Teletypewriter Set AN–TGC–1B does not operate, contacts in Jones outlets TDS and TDP may be shorted out to allow the motors to run continuously. To do this, proceed as follows:

(1) Shut the main power switch off.
(2) Remove plugs MCP and TDP.
(3) Insert any metal conductor between two pins on the same horizontal level in each outlet. Do not insert the conductor between pins 9 and 10 at the bottom level of TDP.

58. Equipment Performance Check List for Teletypewriter Set AN/TGC–1, AN/TGC–1A, or AN/TGC–1B

Item No.	Item	Action or condition	Normal indication	Corrective measures
*	*	* *	* *	*
3	Jones plugs	27- and 30-pin * * * with par. 22. **For AN/TGC–1B, 6-pin or 10-pin plugs of motor-control, time-delay relay panel.**		
*	*	* *	* *	*
7	NORMAL-SPLIT switch (SA). **For AN/TGC–1B, switches (SA) and (SC).**	NORMAL-SPLIT switch * * * in section VI.		
*	*	* *	* *	*

59. Equipment Performance Check List for Normal Duplex Operation

Item No.	Item	Action or condition	Normal indication	Corrective measures
1	NORMAL-SPLIT switch (SA). **For AN/TGC–1B, switches (SA) and (SB).**	Turn to NORMAL.		
*	*	* *	* *	*
6	Main power switch	Throw main power switch to ON.	Typing reperforator and * * * distributor motors run. **In AN/TGC–1B, only the lower reperforator motor runs.**	See part five.
7	Tape-winder switch	Throw the tape-winder switch to ON.	Tape-winder motor runs. **In AN/TGC–1B, the tape-winder motor does not run unless a message is being sent.**	See part five.
*	*	* *	* *	*
12	No. 1 TAPE FEED-OUT key FO–1.	Depress No. 1 TAPE FEED-OUT key FO–1.	Tape feeds out from monitor typing reperforator. **In AN/TGC–1B, tape cannot feed out because the monitor reperforators and tape motors do not run.**	See part five.
*	*	* *	* *	*
16	BREAK KEY	Depress BREAK KEY	Opens test circuit * * * reperforators run open. **In AN/TGC–1B, the upper reperforator motor is not running; therefore, the upper reperforator will not run open.**	See part five.
*	*	* *	* *	*

60. Equipment Performance Check List for Split Duplex Operation

Item No.	Item	Action or condition	Normal indication	Corrective measures
1	NORMAL-SPLIT switch (SA). **For AN/TGC–1B, switches (SA) and (SC).**	Turn to SPLIT.		
*	*	* *	* *	*
6	Main power switch----	Throw main power switch to ON.	Typing reperforator and * * * distributor motors run. **In AN/TGC–1B only the two reperforator motors will run.**	See part five.
7	Tape-winder switch----	Throw tape-winder switch to ON.	Tape-winder motor runs. **In AN/TGC–1B, the tape-winder motor is stopped.**	See part five.
*	*	* *	* *	*

61. Equipment Performance Check List for Normal Single Operation

Item No.	Item	Action or condition	Normal indication	Corrective measures
1	NORMAL-SPLIT switch (SA). **In AN/TGC–1B, switches (SA) and (SC).**	Turn to NORMAL.		
*	*	* *	* *	*
6	Main power switch----	Throw main power switch to ON.	Typing reperforator and transmitter motors run. **In AN/TGC–1B, only the lower reperforator motor runs.**	See part five.
7	Tape-winder switch----	Throw tape-winder switch to ON.	Tape-winder motor runs. **In AN/TGC–1B, the tape-winder motor does not run unless a message is being sent.**	See part five.
*	*	* *	* *	*
18	No. 1 TAPE FEED-OUT key FO–1.	Depress No. 1 TAPE FEED OUT key FO–1.	Tape feeds out from upper typing reperforator. **In AN/TGC–1B, the tape does not feed out from the upper reperforator as the motor is stopped.**	See part five
*	*	* *	* *	*

62. Equipment Performance Check List for Split Single Operation

Item No.	Item	Action or condition	Normal indication	Corrective measures
1	NORMAL-SPLIT switch (SA). **In AN/TGC–1B, switches (SA) and (SC).**	Turn to SPLIT.		
*	*	* *	* *	*
6	Main power switch---	Throw main power switch to ON.	Reperforator and multiple transmitter distributor motors run. **In AN/TGC–1B, only the two reperforator motors will run.**	See part five.
7	Tape winder switch----	Throw tape-winder switch to ON.	Tape-winder motor runs. **In AN/TGC–1B, the tape-winder motor is disconnected.**	See part five.
*	*	* *	* *	*

81. Preventive Maintenance Check List for Teletypewriter Set AN/TGC–1, AN/TGC–1A, or AN/TGC–1B

Item No.	Operations	Item	When performed				Echelon
			Daily	Weekly	Monthly	Semi-annually	
	*	*	*	*	*	*	*
14	----------	Typing and nontyping reperforators (TM 11–2223)	-------	-------	-------	-------	-------
15	1TC-------	**Motor-control, time-delay relay panel (for AN/TGC-1B).**	-------	-------	-------	x	2d

90. Moistureproofing and Fungiproofing

a. A moistureproofing and * * * units for treatment. **Equipment containing motor-control, time-delay relay panels have been moistureproofed and fungiproofed at the factory.**

* * * * *

91. Moistureproofing and Fungiproofing Teletypewriter Sets AN/TGC–1, AN/TGC–1A, and AN/TGC–1B

* * * * *

b. DISASSEMBLY. As the equipment * * * threads during treatment.

* * * * *

(5) Pull out the * * * from the shelf. **On Teletypewriter Set AN/TGC–1B, disconnect the motor-control, time-delay relay panel by pulling out Jones plugs MCP and TDP and by removing the wire from the relay panel to the No. 5 terminal screw of each transmitter. Remove the top plate of the distributor to reach the transmitter terminal boards. To remove the relay panel from the shelf, loosen the holding strap underneath the panel.**

* * * * *

95. General

* * * * *

c. Switch SA is * * * SA4, and SA5. **A six-section rotary switch is used in Teletypewriter Set AN/TGC–1B. The last section of this switch is designated SA6.**

* * * * *

Figures 41, 42, 43, 46, 47, and 48 pertain to Teletypewriter Set AN/TGC–1B as well as to Teletypewriter Sets AN/TGC–1 and AN/TGC–1A. See figure 41.1 for location of time-delay relays in Teletypewriter Set AN/TGC–1B.

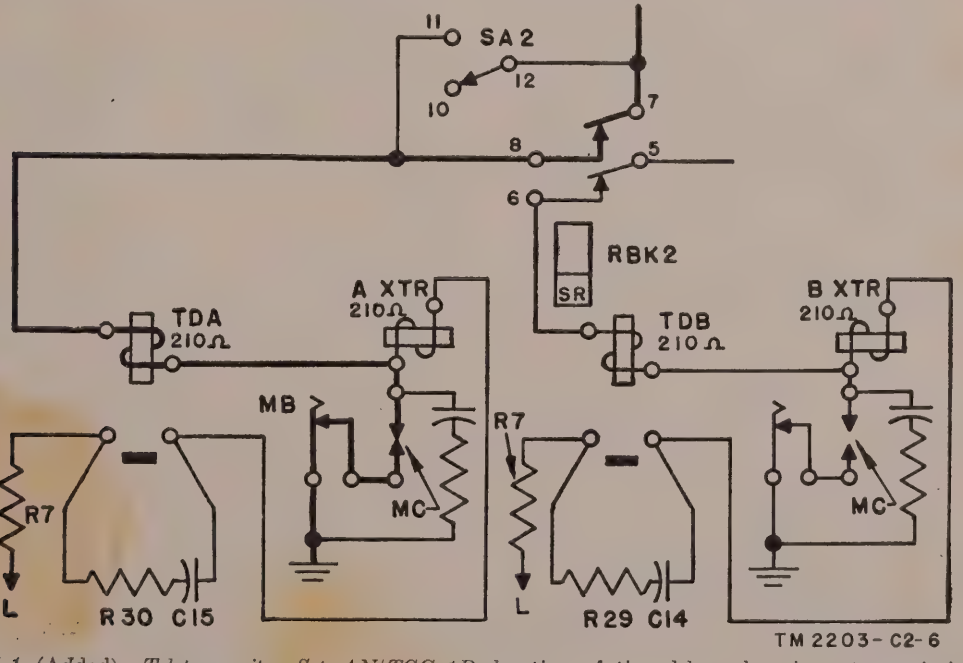

Figure 41.1 (Added). *Teletypewriter Set AN/TGC–1B, location of time-delay relays in pretransmission circuit.*

97. Transmitter Circuits

(figs. 41, **41.1,** 42, and 43)

When transmitter start * * * magnet, close mechanically.

* * * * *

d. TELETYPEWRITER SET AN/TGC–1B. (Added) In Teletypewriter Set AN/TGC–1B, the transmitter magnet coil of each of the three transmitters is replaced by a time-delay relay coil (fig. 41.1). This relay allows a time interval to elapse before its contacts close. During this interval, the transmitter motor reaches full operating speed. At the end of the time interval, the time-delay relay contacts close and energize the associated transmitter coil to start sending the message. This delaying action occurs during both normal and split operation.

Figures 44 and 45 pertain to Teletypewriter Set AN/TGC–1B as well as to Teletypewriter Sets AN/TGC–1 and AN/TGC–1A. See figures 41.1 and 129.1 for the time-delay relay circuit of Teletypewriter Set AN/TGC–1B.

98. Number Transmitter Circuit

(figs. 44, **41.1,** 45, **and 129.1**)

The operation of * * * number transmitter magnet.

* * * * *

d. TELETYPEWRITER SET AN/TGC–1B. (Added) In Teletypewriter Set AN/TGC–1B, the transmitter magnet coil is replaced by a time-delay relay coil (fig. 41.1) which allows a time interval to elapse before its contacts close. During this interval the transmitter motor reaches operating speed. When the relay contacts close, the number transmitter is energized. This delay occurs on both normal and split connections.

99. Message Transmitter Circuits

Whenever relay RN * * * the operated condition.)

* * * * *

c. TELETYPEWRITER SET AN/TGC–1B. (Added) In Teletyperwriter Set AN/TGC–1B, the coil of a time-delay relay replaces the coil of the transmitter magnet.

100. Completion of Transmission Cycle

a. NORMAL OPERATION. At the end * * * cycle of operation. **In Teletypewriter Set AN/TGC–1B, when contacts MC open, the transmitter magnet, the time-delay relay coil, and the series relays are all released. This causes the motors to stop.**

* * * * *

c. TELETYPEWRITER SET AN/TGC–1B. (Added) In Teletypewriter Set AN/TGC–1B, the coil of a time-delay relay replaces the transmitter magnet coil (fig. 41.1).

103. Detailed Functioning of Feed-Out Key FO–1 and Relay RR1

a. NORMAL OPERATION (fig. 52). With switch SA * * * (upper) typing reperforator.

* * * * *

(5) (Added) In normal operation of Teletypewriter Set AN/TGC–1B, switch SA6 opens the circuit of key FO–1 so that tape cannot be fed out of the upper reperforator (fig. 52.1).

* * * * *

Figures 52 and 53 pertain to Teletypewriter Set AN/TGC–1B as well as to Teletypewriter Sets AN/TGC–1 and AN/TGC–1A. See figure 52.1 for the disabling circuit for key FO–1 in Teletypewriter Set AN/TGC–1B which is disabled in normal operation only.

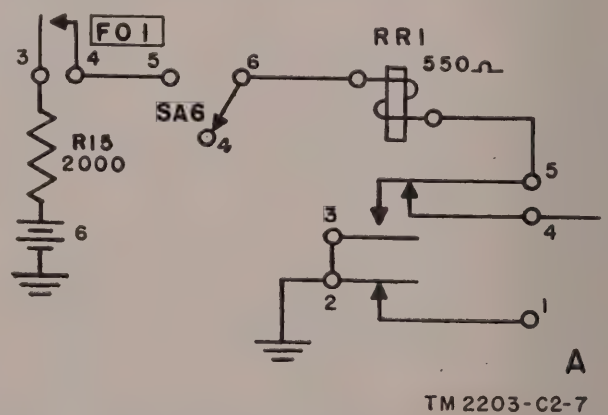

Figure 52.1 (Added) *Teletypewriter Set AN/TGC–1B, disabling circuit for feed-out key FO–1 and relay RR1.*

107. Break Circuit, Relays RBK1 and RBK2

(figs. 60 **and 60.1**).

a. RELAY RBK1. Relay RBK1 normally * * * release of RBK1. **In normal operation**

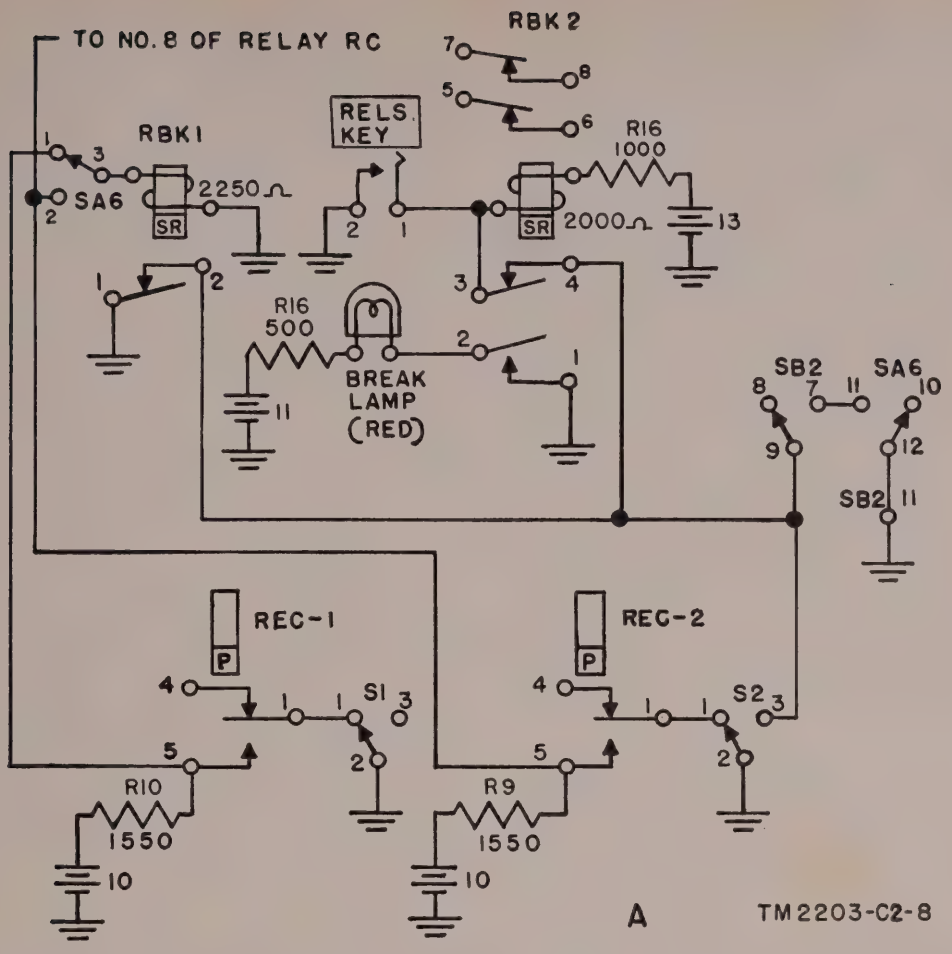

Figure 60.1 (Added) *Teletypewriter Set AN/TGC–1B, break circuit, relays RBK1 and RBK2. (See figure 60.)*

of Teletypewriter Set AN/TGC–1B, contacts 1 and 3 of switch SA6 (fig. 60.1) connect the coil of relay RBK1 to the space contact of REC–1. In split operation, REC–2 controls RBK1 as described above for Teletypewriter Sets AN/TGC–1 and AN/TGC–1A.

b. Relay RBK2.

* * * * *

(2) The break feature * * * release of RBK1. **The break feature of Teletypewriter Set AN/TGC–1B will function on normal duplex operation because switch SA6 opens the holding ground. On split-duplex operation, the break feature will not release relay RBK2.**

* * * * *

109. Detailed Functioning of Signal Indicator Panel

The signal indicator * * * signal indicator panel.

* * * * *

d. No. 1 Tape Feed-Out No. 2 (Feed-Out Keys FO–1 and FO–2). Feed-out keys FO–1 * * * feed out blanks. **In normal operation of Teletypewriter Set AN/TGC–1B, switch SA6 opens the circuit to key FO–1 so that the reperforator cannot feed out tape if FO–1 is depressed (fig. 52.1).**

* * * * *

117. Multiple Transmitter Distributor Base

* * * * *

d. (Added) In Teletypewriter Set AN/TGC–1B, the NORMAL-SPLIT switch (SC) controls the motor circuits of the upper reperforator and tape winder. In normal operation, both upper reperforator and tape-winder motors are stopped, except when transmission occurs. In split operation, the upper reperforator motor runs continuously and the tape-winder motor is stopped.

117.1 Detailed Functioning of Motor-Control, Time-Delay Relay Panel

(Added)

The relay panel is mounted on the multiple transmitter. A strap which locks on the under side of the panel holds the assembly firmly in place.

a. The three motor-control relays are wired in series with the common ground lead of the multiple transmitter. Whenever any one of the transmitter start levers is released during normal operation, all three relays operate to start the multiple transmitter, the upper reperforator, and the tape-winder motors. Spark suppressors are connected across the relay contacts. The relays are sealed hermetically, and no adjustments are required.

b. Three mercury-type, time-delay relays are wired to allow sufficient time for the motors to reach operating speed before closing the transmitter magnet circuits. Spark suppressors are connected across the relay contacts. These relays also are sealed hermetically and require no adjustments.

118. Detailed Functioning of Power Cabinet

The power cabinet * * * motors (par. 24*b*(1). **Teletypewriter Set AN/TGC–1B is equipped with a Barber-Colman a-c type tape-winder motor. The A-C–D-C switch, therefore, cuts off power to the tape-winder motor on d-c operation. On all sets, a** power outlet also is provided into which the next adjacent Teletypewriter Set AN/TGC–1 may be plugged. See figures 20, **20.1**, 125, and **125.1** for assembly and wiring diagrams.

119. NORMAL SPLIT Switch SA

The NORMAL-SPLIT * * * the equipment drawer. **In Teletypewriter Set AN/TGC–1B, the SA switch has six sections.**

122. POLAR MAKE-BREAK Switches S3 and S4

The POLAR MAKE-BREAK * * * transmitting relays. In the MAKE-BREAK position, the center-tapped resistors are disconnected and the bias windings or relays REC–1 and REC–2 are **batteries. In Teletypewriter Set AN/TGC–1B, a 1,000-ohm resistor R25 across terminals 1 and 3 of switch S3 holds REC–1 on spacing during polar operation when a break signal is received.**

145.1 Motor-Control, Time-Delay Relay Panel Trouble-Analysis Chart

(Added)

Item No.	Item	Normal action	Possible trouble	Remedy
1	Motor-control relays MON, URO, and XTR.	Start and stop motors	Contacts open	Replace relay.
			Contacts closed	Replace relay or replace shorted spark suppressor capacitor.
			Dirty contacts	Replace relay or replace shorted spark suppressor capacitor.
2	Time-delay relays TDN, TDA, and TDB.	Allow time interval for motors to reach operating speed.	Erratic timing	Replace relay.
			Contacts closed	Replace relay or replace shorted spark suppressor capacitor.
3	NORMAL-SPLIT switch (SC).	Changes upper reperforator from monitor to receiving and vice versa.	Broken contacts	Replace switch.

155.1 Repairs to Relay Panel

(Added)

Repairs to the relay panel consist of replacing defective relays, capacitors, resistors, and wiring. Since the relays are sealed hermetically, no adjustments can be made.

Figure 80. Tape-winder unit, front view. **(The lamp-holder in Teletypewriter Set AN/TGC–1B differs somewhat from that in corresponding equipments. For Teletypewriter Set AN/TGC–1B, make the following changes: "193296 LAMPHOLDER" to read: 310148–28 LAMPHOLDER; "C3530 LAMP BRACKET" to read: 410492 LAMP BRACKET; "C3505 BRACKET" to read: 303505 BRACKET; and "8–32 HEX I. NUT" to read: 410493 8–32 WINGNUT.)**

220.1 Testing Relays on Motor-Control, Time-Delay Relay Panel

(Added)

a. The relays on the motor-control, time-delay

relay panel cannot be adjusted, but they can be tested. Motor-control relays MON, URO, and XTR should operate quickly when 50-ma dc is applied to their 4-ohm windings. Time-delay relays TDN, TDA, and TDB should operate within 1.2 to 1.5 seconds when 100-ma dc is applied to their 210-ohm windings.

b. Special test equipment is required to measure the time-delay interval. If test equipment is not available, an operational test of the teletypewriter may be made in which a test tape is transmitted and received without missing the first character and without errors. If a test message can be transmitted and received perfectly, it is assumed that the time-delay interval is sufficient for all motors to reach full operating speed.

APPENDIX I

REFERENCES, ABBREVIATIONS, AND GLOSSARY

* * * * *

9. Abbreviations

Abbreviations (or code designation)	*Term or quantity*

* * * * *

xmtr, xtr____ transmitter.

MCP_____ motor-control relay connector.

MCS____ motor-control relay receptacle.

SC_____ NORMAL-SPLIT switch on relay panel.

TDA____ A transmitter time-delay relay.

TDB____ B transmitter time-delay relay.

TDN____ number transmitter time-delay relay.

TDP____ time-delay relay connector.

TDS____ time-delay relay receptacle.

APPENDIX II

PARTS IDENTIFICATION LISTS AND TABLES OF REPLACEABLE PARTS

* * * * * * * * * * *

Figure 124. **Teletypewriter Sets AN/TGC–1 and AN/TGC–1A, equipment** *drawer, wiring diagram.*

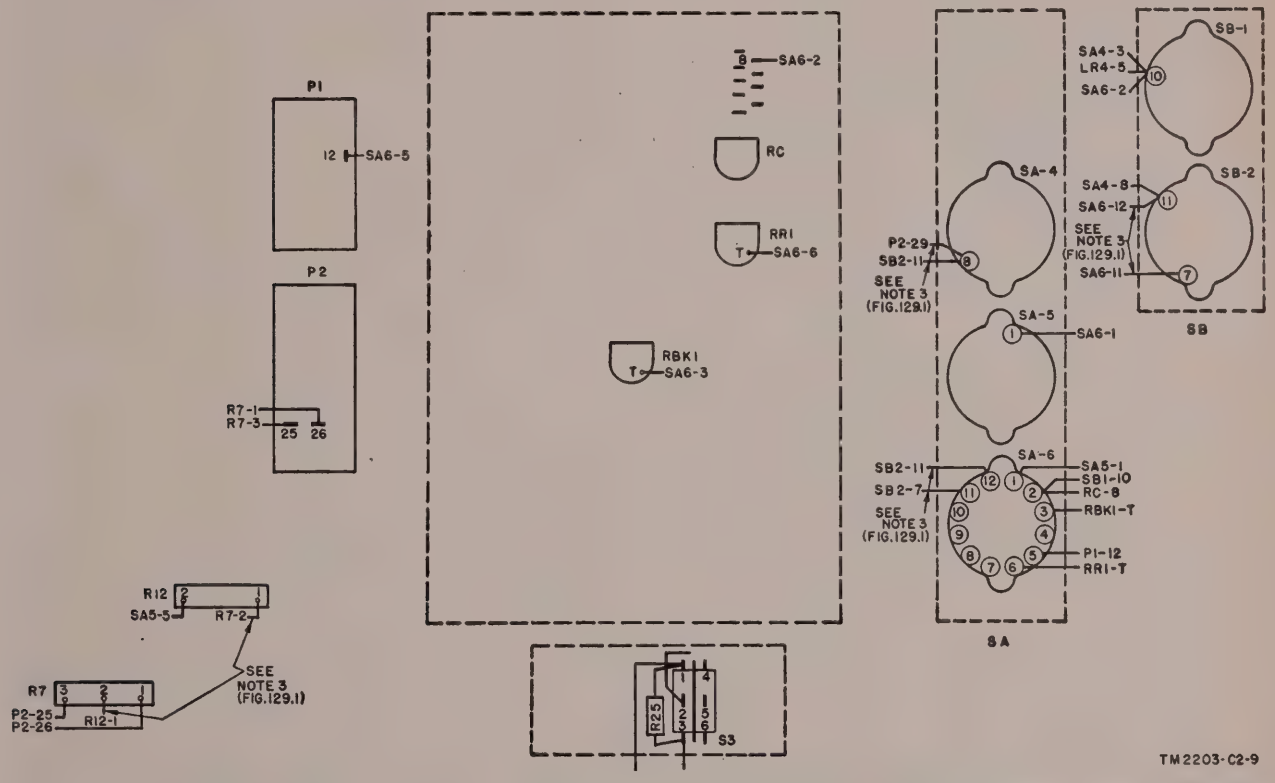

Figure 124.1 (Added). *Teletypewriter Set AN/TGC–1B, changes required for wiring equipment drawer. (Compare with figure 124.)*

Figure 125. **Teletypewriter Sets AN/TGC–1 and AN/TGC–1A, power** *conduit system, wiring diagram.*

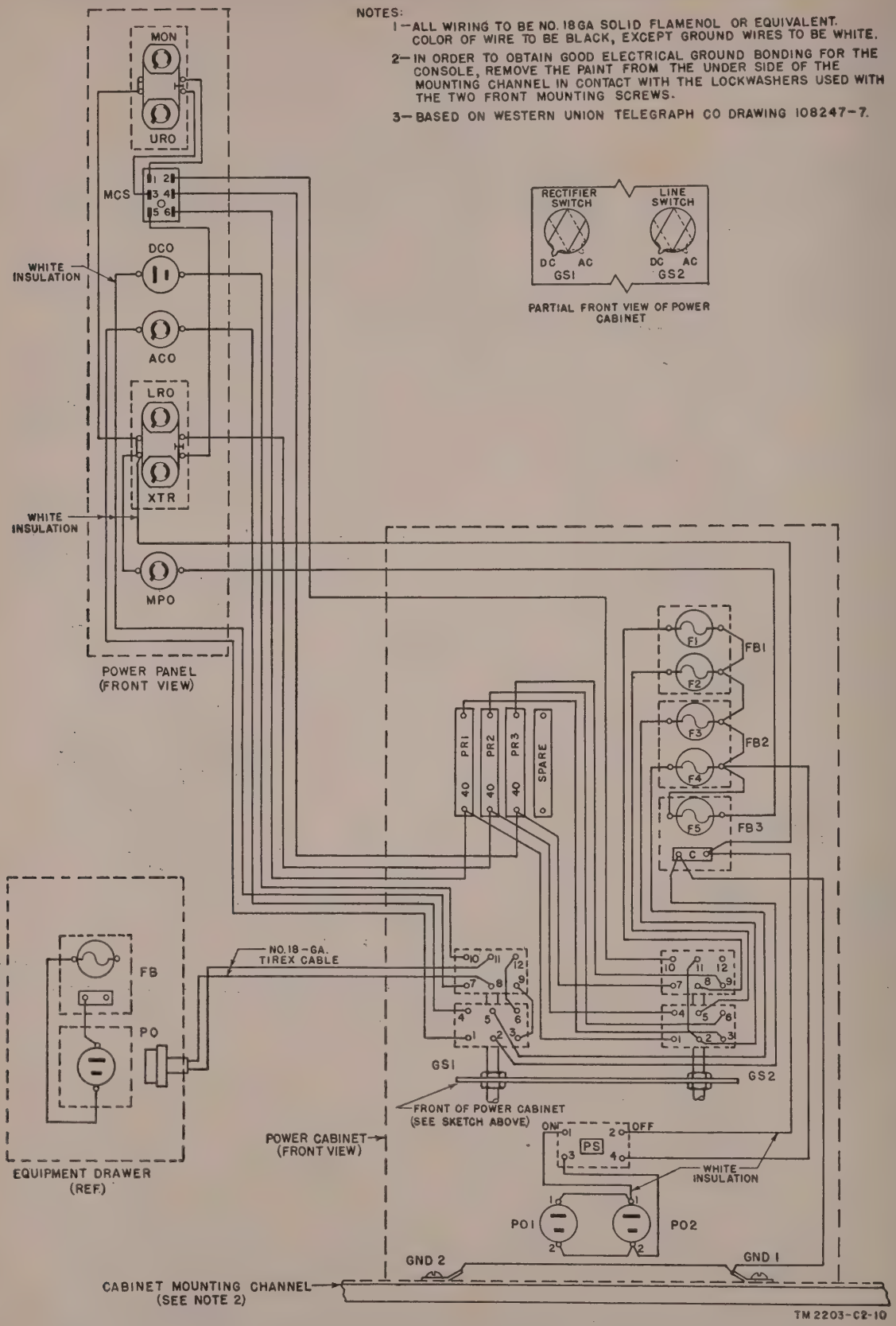

Figure 125.1 (Added). *Teletypewriter Set AN/TGC–1B, power conduit system, wiring diagram.*

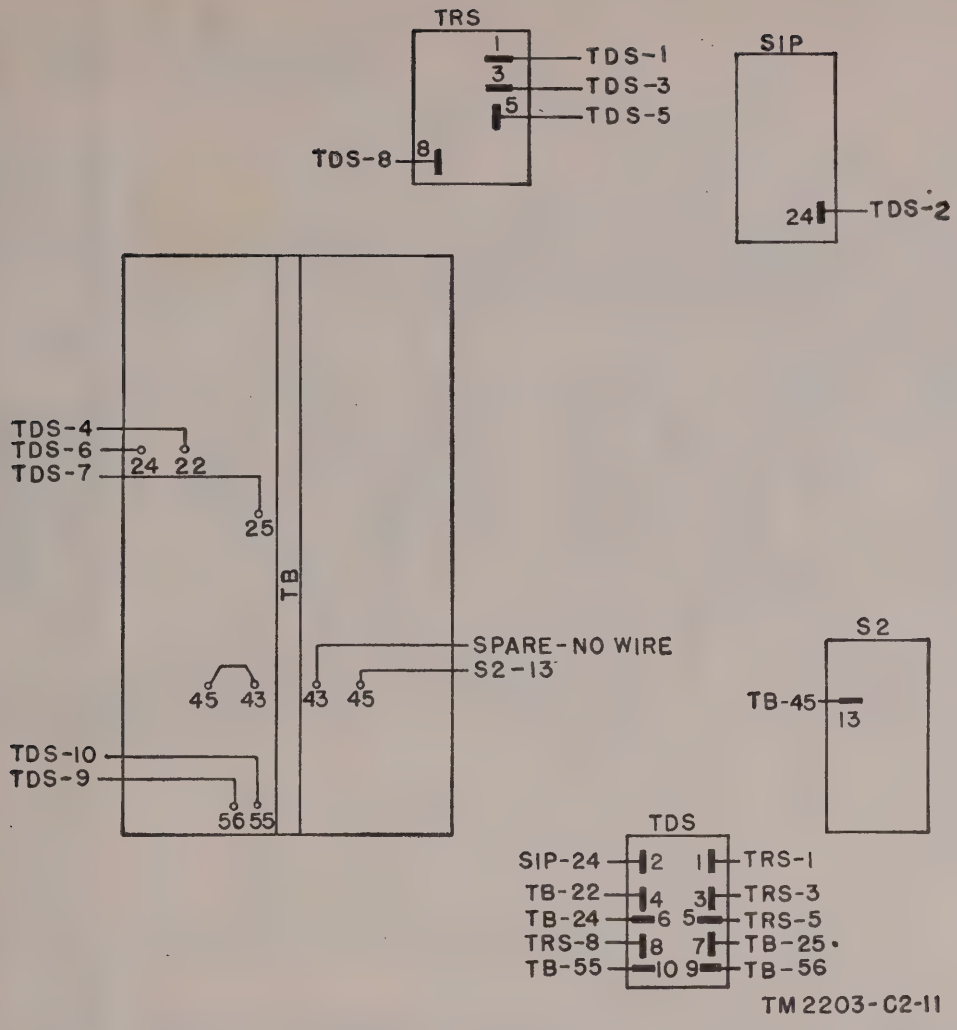

Figure 126.1 (Added). *Teletypewriter Set AN/TGC–1B, changes required for signal wiring. (Compare with figure 126.)*

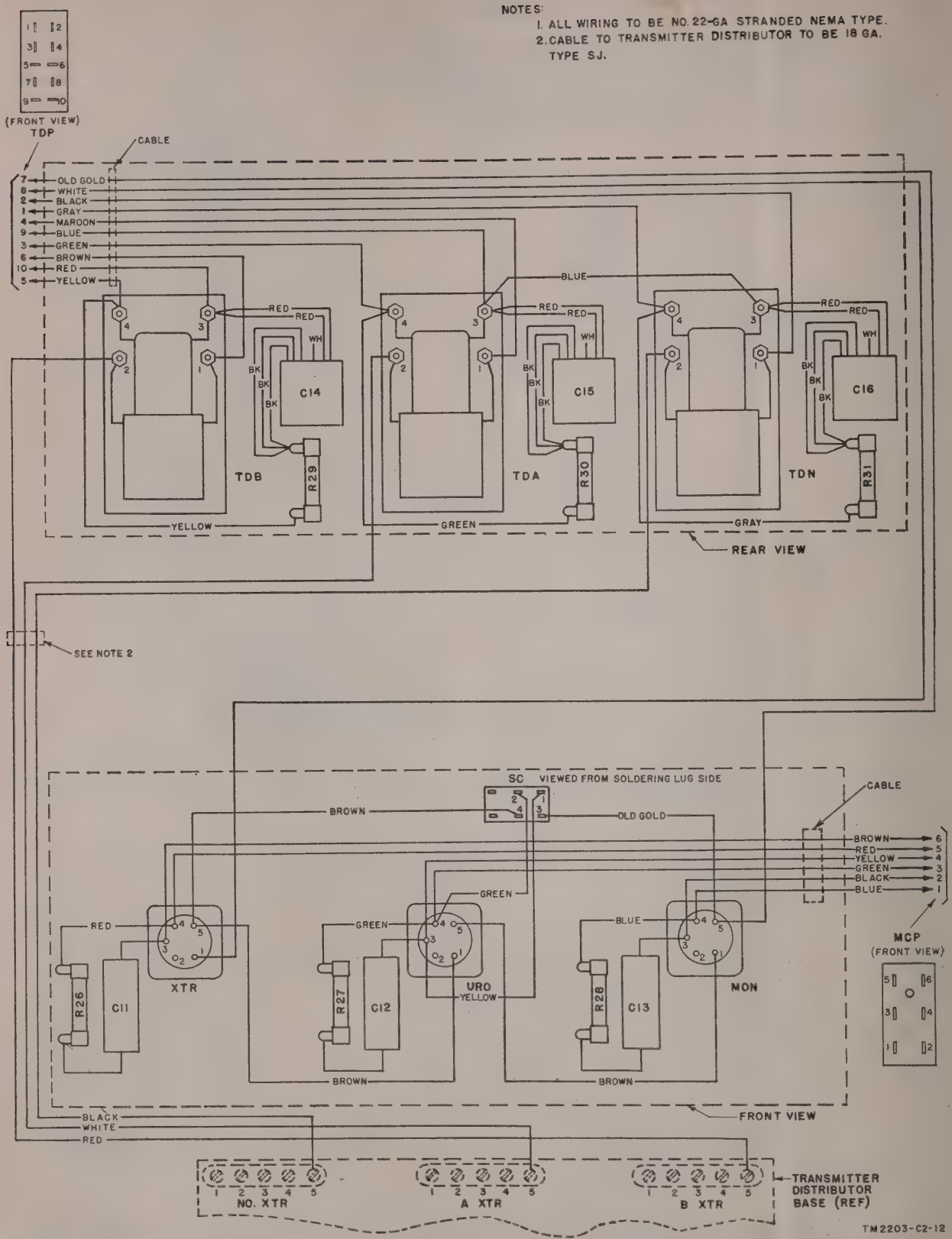

Figure 126.2 (Added). *Teletypewriter Set AN/TGC–1B, motor-control, time-delay relay panel, wiring diagram.*

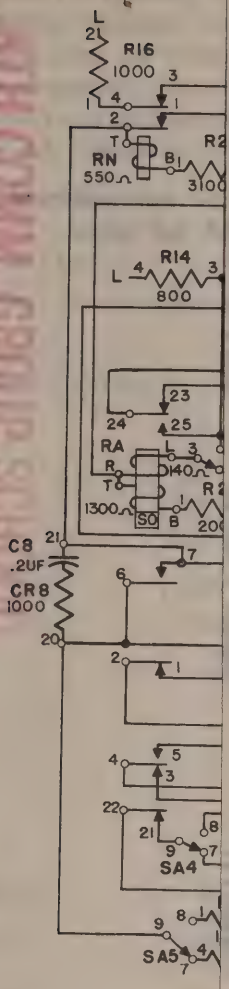

● = TERMINALS OF 2
○ = TERMINALS OF 2
◉ = TERMINALS OF
◎ = TERMINALS OF
D = TERMINALS OF
▲ = TERMINALS OF 2
△ = TERMINALS OF 2
SOCKET SIS
■ = TERMINALS OF 8
□ = TERMINALS OF 8
⊗ = TERMINALS OF L
→ = TERMINALS OF 6
≻ = TERMINALS OF
SOCKET M
⊞ = TERMINALS OF
⊠ = TERMINALS OF

= TIME DELA

= SLOW RELE

= SLOW OPER

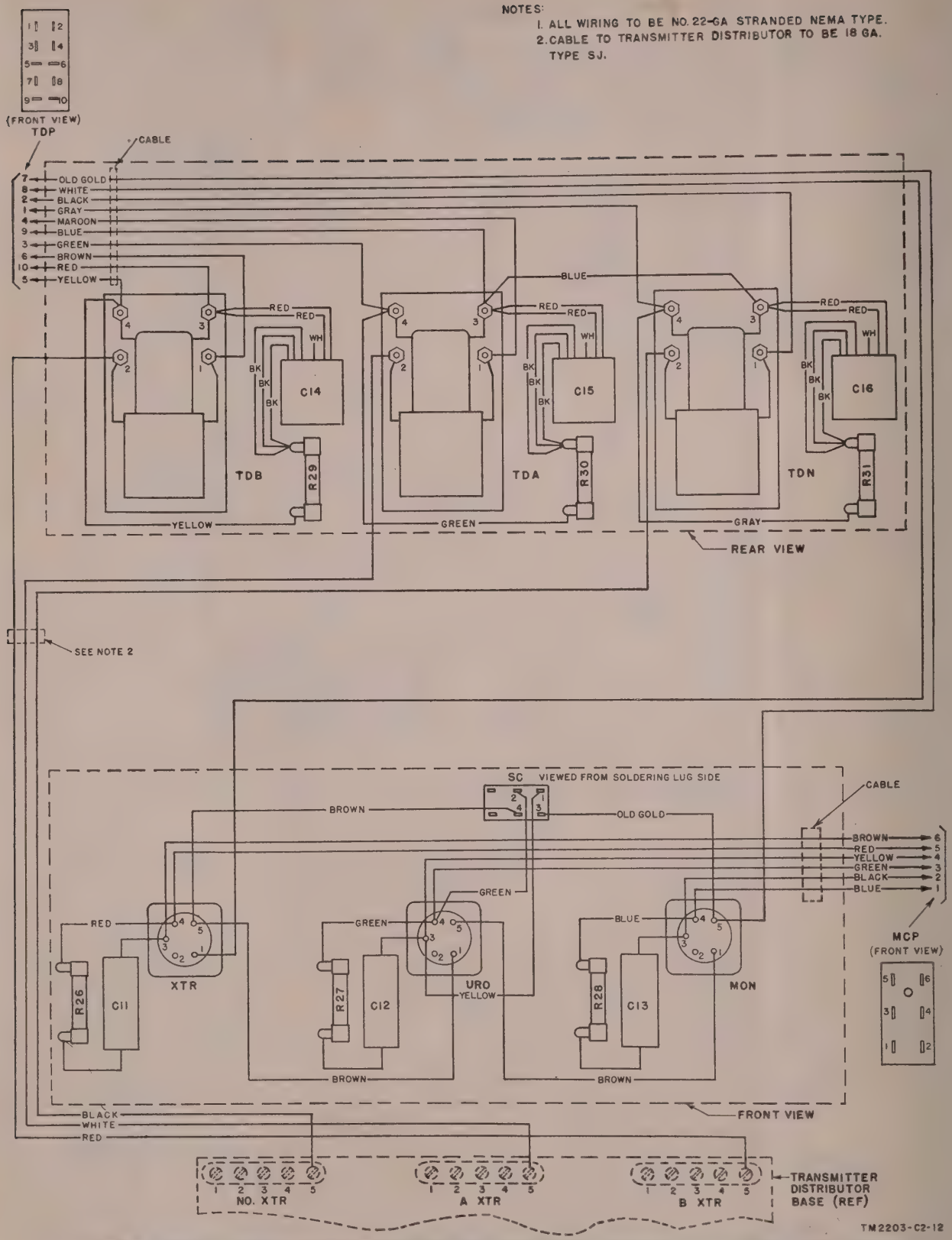

Figure 126.2 (Added). *Teletypewriter Set AN/TGC–1B, motor-control, time-delay relay panel, wiring diagram.*

CONFIDENTIAL

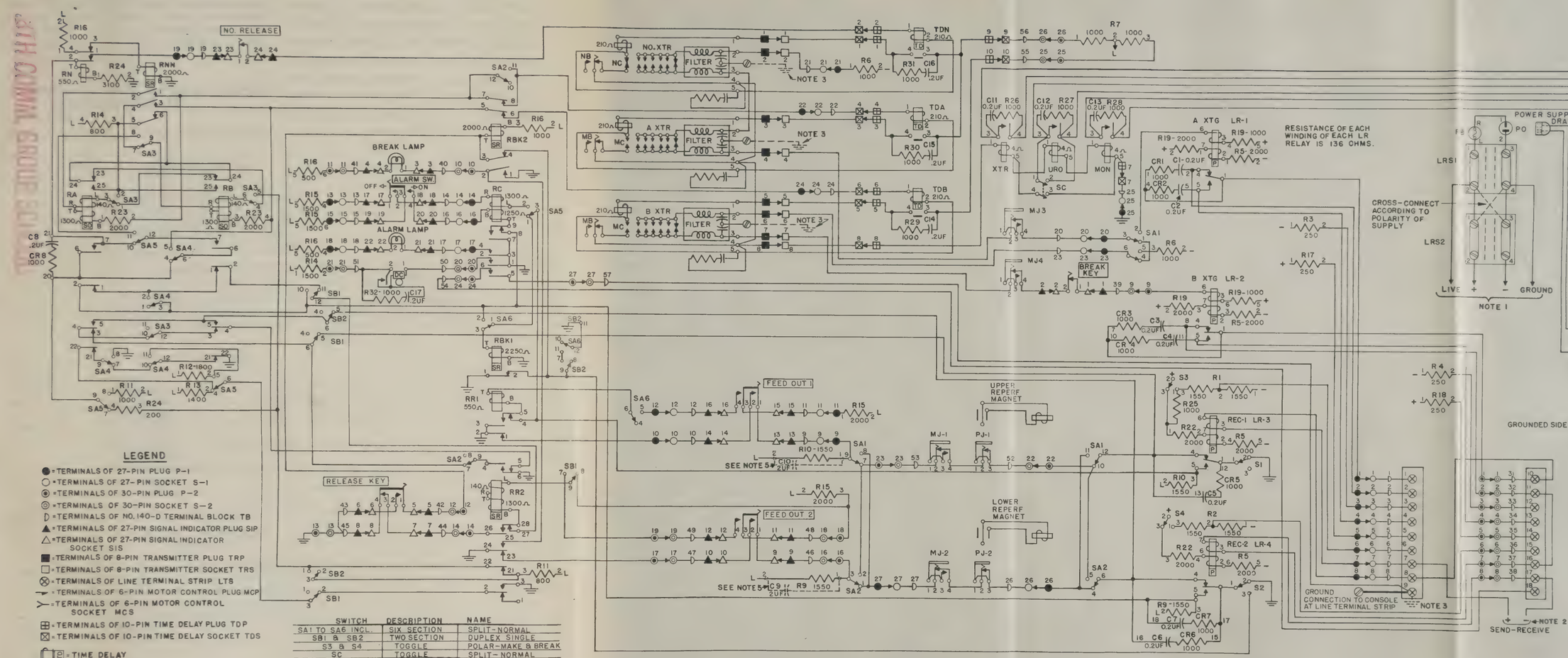

LEGEND

- ●=TERMINALS OF 27-PIN PLUG P-1
- ○=TERMINALS OF 27-PIN SOCKET S-1
- ◉=TERMINALS OF 30-PIN PLUG P-2
- ◎=TERMINALS OF 30-PIN SOCKET S-2
- D=TERMINALS OF NO. 140-D TERMINAL BLOCK TB
- ▲=TERMINALS OF 27-PIN SIGNAL INDICATOR PLUG SIP
- △=TERMINALS OF 27-PIN SIGNAL INDICATOR SOCKET SIS
- ■=TERMINALS OF 8-PIN TRANSMITTER PLUG TRP
- □=TERMINALS OF 8-PIN TRANSMITTER SOCKET TRS
- ⊗=TERMINALS OF LINE TERMINAL STRIP LTS
- →=TERMINALS OF 6-PIN MOTOR CONTROL PLUG MCP
- ≻=TERMINALS OF 6-PIN MOTOR CONTROL SOCKET MCS
- ⊞=TERMINALS OF 10-PIN TIME DELAY PLUG TDP
- ⊠=TERMINALS OF 10-PIN TIME DELAY SOCKET TDS
- P = TIME DELAY
- R = SLOW RELEASE
- O = SLOW OPERATE

SWITCH	DESCRIPTION	NAME
SA1 TO SA6 INCL.	SIX SECTION	SPLIT-NORMAL
SB1 & SB2	TWO SECTION	DUPLEX SINGLE
S3 & S4	TOGGLE	POLAR-MAKE & BREAK
SC	TOGGLE	SPLIT-NORMAL
S1 & S2	TOGGLE	OPR, NON-OPR.

Figure 129.1 (Added). Teletypewriter set AN/TGC-1B, normal single operation, schematic diagram.

NOTES:

1. LIVE CONNECTS TO ALL POINTS MARKED L ON DIAGRAM. + CONNECTS TO ALL POINTS MARKED + ON DIAGRAM. − CONNECTS TO ALL POINTS MARKED − ON DIAGRAM. GROUND CONNECTS TO ALL POINTS ⏚ ON DIAGRAM
2. THE + AND − SIGNS ON THE EXTERNAL LINE LEADS MERELY INDICATE CORRECT POLARITY FOR SIGNALING BATTERY. THESE POINTS ARE NOT CONNECTED TO BLOCK LRS2
3. THESE POINTS ARE PHYSICALLY GROUNDED. WHEN POWER IS SUPPLIED TO EQUIPMENT DRAWER FROM THE RECTIFIER, THERE WILL BE NO PHYSICAL GROUND IN THE EQUIPMENT DRAWER AND THEREFORE NO CONNECTION BETWEEN LRS1-4 AND THE POINTS MARKED NOTE 3.
4. BASED ON WESTERN UNION TELEGRAPH CO DRAWING P-10222
5. MODIFICATION REQUIRED FOR 100 WORDS PER MINUTE.
6. POSITIONS OF CONDITIONING SWITCHES FOR OTHER APPLICATIONS THAN SHOWN HEREON − SAME AS SHOWN ON FIGS. 127, 128, 130, 131, 132, EXCEPT ON SPLIT CONNECTION, SWITCHES SC AND SA6 SHALL BE THROWN TO OPPOSITE POSITIONS.
7. UNLESS OTHERWISE SHOWN; RESISTORS ARE IN OHMS. CAPACITORS ARE IN UUF.

TM 2203-C2-13

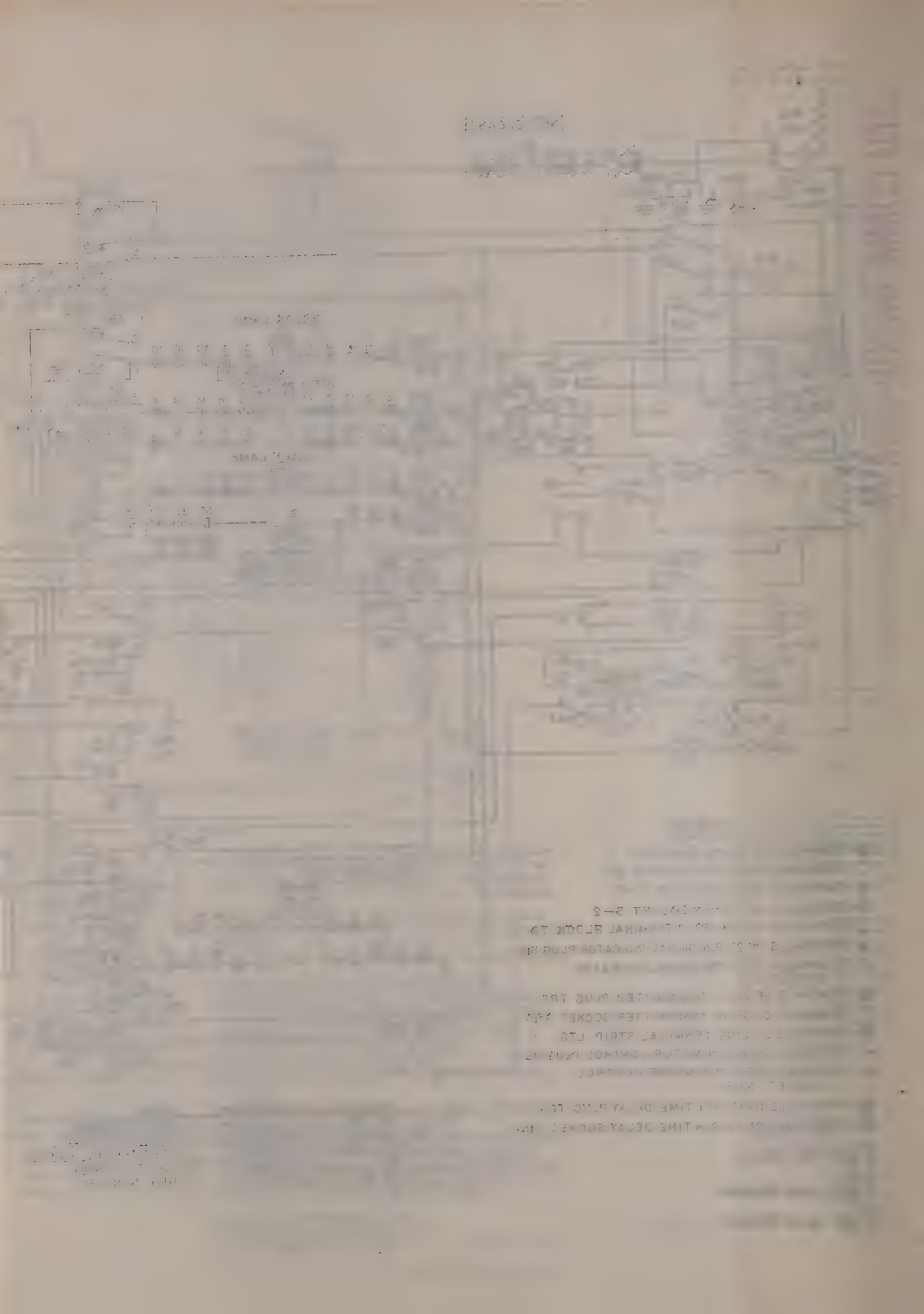

Add the following statement to the captions of figures 127 through 132: For a-c operation, ground symbols indicate negative battery connections which bear no relation to chassis ground. For d-c operation, ground symbols indicate negative battery connections which are connected to chassis ground. Refer to note 3.

8. Identification Table of Parts for Teletypewriter Set AN/TGC–1B

(Added)

Note. The fact that a part is listed in this table is not sufficient basis for requisitioning the item. Requisitions must cite an authorized basis, such as a specific T/O & E, T/A, SIG 7 & 8, SIG 7–8–10, SIG 10, list of allowances of expendable material, or other authorized supply basis. The Department of the Army Supply Catalog applicable to the equipment covered in this manual is SIG 7 & 8–AN/TGC–1. For an index of available supply catalogs in the Signal portion of the Department of the Army Supply Catalog, see the latest issue of SIG 1.

Fig. No. & ref symbol	Name of part and description	Function of part	Signal Corps stock No.
	Note. Parts used in Teletypewriter Set AN/TGC–1B are the same as parts used in Teletypewriter Set AN/TGC–1A, listed in paragraph 7 of this appendix, except for the parts below. Parts listed below are used only in Teletypewriter Set AN/TGC–1B or are parts which can be used in Teletypewriter Set AN/TGC–1A. In the latter case, however, stock numbers are different from those which were assigned originally to corresponding parts.		
	TELETYPEWRITER SET AN/TGC–1B: fixed station; std common keyboard; English characters; 72 characters per line; sending and receiving; 110 v to 120 v a-c or d-c, 60-cyc series-governed motor; 5 unit code; 368.1 or 600 opm.	Complete teletypewriter set for use in comcenters and tape relay stations. Sends, receives, and monitors teletypewriter messages on perforated tape on which the message also is typed.	4T1000–1A
	MISCELLANEOUS GROUP		
Figure 3	CHUTE, tape: c/o chute, mtg base, and pivot bearing.	Tape guide	4TWU1058A
MCS	CONNECTOR, receptacle: 6 rect female cont; polarized.	Motor-control connection	2Z8639
TDS	CONNECTOR, receptacle: 10 rect female cont; polarized.	Time-delay outlet	2Z8639–6
	CONNECTOR, plug: 2 parallel blades; male; polarized.	Power connection	6Z7591–20
	CONNECTOR, plug: 2 flat parallel cont; male; polarized.	Power connection	6Z1727.1
	CONNECTOR, plug: 2 parallel cont; female.	Power connection	6Z3150–4
Figure 4	JACK, telephone: for 2 cond plug .25″ dia	Used in monitor jack box	4C4903.03A.1
	MULTIPLE TRANSMITTER DISTRIBUTOR		
Figure 18.2	TRANSMITTER DISTRIBUTOR: single channel; 115 v a-c or d-c, 50/60 cyc, 30 w, single ph, series-governed motor; w/10-spot target; 5-unit code, 60 or 100 opm; incl 1 number transmitter, 2 message transmitters, and a base.	Provides continuous transmission.	4T1000–10
	PLATE, mounting	Hinged tape lid mounting	4T110790

Fig. No. & ref symbol	Name of part and description	Function of part	Signal Corps stock No.
	POWER CABINET		
	CATCH, fastener: steel, cad pl; 1⅛″ lg x ⅝″ h o/a.	For upper reperforator shelf	6Z1747–39
PR1, PR2, PR3	RESISTOR, fixed: WW; 40 ohms ±5%, 74 w.	Used in a-c motor circuits	3RW15907
	RECTIFIER UNIT		
Figure 21	CAPACITOR, fixed: electrolytic; 500 uf; 200 vdcw.	Filter	3DB500–2
	RELAY CONTROL UNIT		
Figure 38	CONTROL, telegraph line: manual and automatic controls; 23¾″ wd x 14½″ h x 23⅛″ d o/a.	Relay control unit for telegraph line control.	4T1000–1/C5
R24 (top)	RESISTOR, fixed: WW; 200 ohms ±5%; 16 w.	Limits current in relay RN	3RW20106
R14 (top)	RESISTOR, fixed: WW; 800 ohms ±5%; 16 w.	Current limiter for relays RA and RB.	3RW23705
CR1, CR2, CR3, CR4, CR5.	RESISTOR, fixed: comp; 1000 ohms ±10%; 1 w.	Current limiters in spark suppressor circuit.	3RC30BF102K
CR6, CR7, CR8	RESISTOR, fixed: comp; 1000 ohms ±10%; 2 w.	Holds REC–1 on space during break on polar operation.	3RC42BF102K
R14 (bottom)	RESISTOR, fixed: WW; 1600 ohms ±5%; 12 w.	Limits bell alarm circuit current	3RW25508
R6	RESISTOR, fixed: 2000 ohms ±5%; 25 w; CT.	Current limiters for RA and RB relays.	3Z5420.20
SB	SWITCH, rotary: 24-pole, 2-position; 6 decks; 2″ dia x 4¼″ lg o/a.	NORMAL-SPLIT switch	3Z9825–39.9
	REPERFORATOR		
Figure 3	REPERFORATOR: typing, receive only; 5-unit code; comm character arrangement w/o in upper case P, Gothic-style type; pallet arrangement #235.	Furnishes copy or receives messages on perforated tape on which message also is typed.	4TFPR29GS235
	TAPE-WINDER UNIT		
Figure 80	GEAR: spur type; steel; 14 teeth; 64 pitch, ¼″ PD; 3/32″ OD x ¼″ thk, ⅛″ bore.	Motor unit drive gear	2Z4878–741
Figure 80	WASHER, extruded: cup shape; 1″ OD x .377″ ID.	Spring centering washer	6L58430
Figure 80	WASHER, flat: .516″ ID x 1.250″ OD x .062″ thk.	Clutch disk friction washer	4T72883
Figure 18.2	TIME-DELAY UNIT		
TDP	CABLE ASSEMBLY, power: 10 #22 AWG B&S stranded cond; 31″ lg excl term.; 9 Pat-MacGuyer #994 term. one end w/ Jones plug HB #P–310CCT other end.	Connection for time-delay unit to additional units. Control cord to signal circuit for time delay.	3E7350.1–31.8
	CABLE ASSEMBLY, power: 3 #18 AWG B&S stranded cond; 12″ lg excl term.; rubber ins; 600 v working.	Power supply cord to multiple transmitter distributor for time-delay relay windings.	3E7350.1–12.2
MCP	CABLE, special purpose: electrical; interconnecting; 6 #22 AWG tinned copper cond; 31″ lg excl term.; w/Jones plug #P–406CCT.	Supplies power to time-delay unit.	1B3022–6.1

Fig. No. & ref symbol	Name of part and description	Function of part	Signal Corps stock No.
C14, C15, C16	CAPACITOR, fixed: paper dielectric: 3 sec.; sec. #1—100,000 μμf, sec. #2—100,000 μμf, sec. #3—10,000 μμf; sec. #1 and 2—±15,000 μμf, sec. #3—±2000 μμf; 300 vdcw.	Spark suppression	4T94679
C11, C12, C13	CAPACITOR, fixed: paper; 200,000 μμf ±20%; 600 vdcw.	Spark suppression	3DA200–45
TDP	CONNECTOR, plug: 10 flat male cont; polarized.	Time-delay relay wiring connector.	2Z7120.3
MCP	CONNECTOR, plug: 6 flat parallel male cont; polarized.	Motor-control relay wiring connector.	2Z7228–15
XTR, URO, MON	RELAY, armature: SPDT, normally open; 115 v d-c.	Motor control	2Z7587–269
TDA, TDN, TDB	RELAY, time-delay: SPST, normally open; 120 v d-c.	Transmitter magnet control	2Z7598–158
R26, R27, R28, R29, R30, R31.	RESISTOR, fixed: comp; 1000 ohms ±10%; 1 w.	Current limiters in time-delay circuit.	3Z6100–301
SC	SWITCH, toggle: DPDT	NORMAL-SPLIT switch	3Z9849.135

[AG 300.7 (20 Sep 51)]

BY ORDER OF THE SECRETARIES OF THE ARMY AND THE AIR FORCE:

OFFICIAL:
WM. E. BERGIN
Major General, USA
The Adjutant General

J. LAWTON COLLINS
Chief of Staff, United States Army

OFFICIAL:
K. E. THIEBAUD
Colonel, USAF
Air Adjutant General

HOYT S. VANDENBERG
Chief of Staff, United States Air Force

DISTRIBUTION:

Army:

Tech Svc (1) Arm & Svc Bd (1); AFF Bd (ea Svc Test Sec) (1); AFF (5); AA Comd (2); OS Maj Comd (5); Base Comd (5); MDW (5); Log Comd (2); A (20); CHQ (2); FC (2); Sch (2) except 11 (25); Gen Dep (2); Dep 11 (20) except Sig Sec, Gen Dep (10); Tng Div (2); PE (10), OSD (2); Lab 11 (5); 4th & 5th Ech Maint Shops 11 (3); Two (2) copies to each of the following T/O & E's: 5–192; 5–312; 5–315; 5–316; 6–200; 6–201; 6–225; 6–226; 6–235; 6–236; 6–415; 6–416; 6–435; 6–501; 6–515; 8–22; 8–581; 8–590; 8–667; 10–22; 11–7N; 11–15N; 11–18N; 11–57N; 11–97; 11–107; 11–127; 11–500 CA, CB, CC, CD; 11–547; 11–557; 11–587; 11–592; 11–597; 32–500 GN, GO, GP; 55–12; SPECIAL DISTRIBUTION:

For explanation of distribution formula, see SR 310–90–1.

Air Force:

Hq, USAF (25); USAF Maj Comd (5); USAF Sub Comds (3); Services (MATS) (2); All other Class III Installations (2). Overseas: Maj Air Comds (5); Numbered Air Forces (3); Overseas Air Bases (2). Special Distribution: Commandant, AF Technical School (Communications) Scott Air Force Base, Belleville, Ill. (10).

U. S. GOVERNMENT PRINTING OFFICE: 1951

DEPARTMENT OF THE ARMY TECHNICAL MANUAL AND AIR FORCE MANUAL

TELETYPEWRITER SETS AN/TGC-1 AND AN/TGC-1A

C 1, TM 11-2203
AFM 102-2A

DEPARTMENTS OF THE ARMY AND
THE AIR FORCE
WASHINGTON 25, D. C., *23 March 1949*

TM 11-2203 — AFM 102-2, 10 March 1949, is changed as follows:

168. Multiple Transmitter Distributor Units

The requirements and * * * three transmitter units.

Note. (Added.) It will be necessary to supply 0.100 ampere direct current for satisfactory operation of the start magnet.

170. Clutch Spring Compression (fig. 82)

a. REQUIREMENT. With the clutch * * * the clutch teeth. **With equipment procured on Order No. 9838-Phila-48, it should require 12 to 15 ounces to separate the clutch teeth.**

* * * * *

172. Stop-Magnet Bracket (fig. 82)

a. REQUIREMENT. With the magnet * * * clutch driven member. **With equipment procured on Order No. 9838-Phila-48, the clearance should be not more than 0.004 inch.**

* * * * *

173. Armature Spring Tension (fig. 82)

a. REQUIREMENT. With the clutch * * * the spring eye. It should require 2 to 3½ ounces to extend the spring to its operating position length **when the armature is equipped with a No. 2836 spring (21 turns, 60 words per minute operation). It should require 3½ to 4½ ounces to extend the spring to its operating position length when the armature is equipped with a No. 111342 spring (16 turns, 100 words per minute operation).**

* * * * *

174. Transmitting Contact Gap (fig. 83)

a. REQUIREMENT. With any contact * * * to 0.025 inch. **The short contact springs should rest against their backstops with a pressure of 4 to 8 ounces, measured by applying the push end of an 8-ounce scale to the end of the short contact springs.**

b. ADJUSTMENT. Bend the shorter contact **springs and position the backstop adjusting screws to meet the above requirements.**

178. Tape-Out Contact-Lever Latch Spring Tension (fig. 86A)

a. REQUIREMENT. With the tape-out * * * the latch moving. **With equipment procured on Order No. 9838-Phila-48, it should require 1¼ to 2 ounces to start the latch moving.**

* * * * *

184.1 (Added.) Tape-Out Sensing Lever (figs. 87.1 and 87.2)

a. PREPARATION. Unhook the release bar spring from the release bar. Remove the four screws which hold the top plate and the shims from under each corner of the top plate. Move the release bar out of the way and slide the top plate off the unit.

Caution: Do not bend the tape sensing levers.

b. REQUIREMENTS.

(1) The top of the tape-out sensing lever pin should be flush within 0.005 inch with the top of the adjacent selector lever pin.

(2) With the transmitting cam cylinder in its stop position, there should be 0.015 to 0.030 inch between the end of the tape-out operating lever and the vertical portion of the tape-out sensing lever as shown in figure 87.2.

c. ADJUSTMENT.

(1) Adjust the tape-out sensing lever pin by bending the horizontal leg of the tape-out sensing lever with bending tools placed as shown in Ⓐ, figure 87.1.

(2) Adjust the transmitting cam cylinder by bending the vertical leg of the tape-out sensing lever with tools placed as shown in Ⓑ, figure 87.1.

d. REPLACEMENT. Replace the top plate and release bar spring by reversing the procedure outlined in *a* above.

Note. It is recommended that two 116799 bending tools be used to facilitate this adjustment.

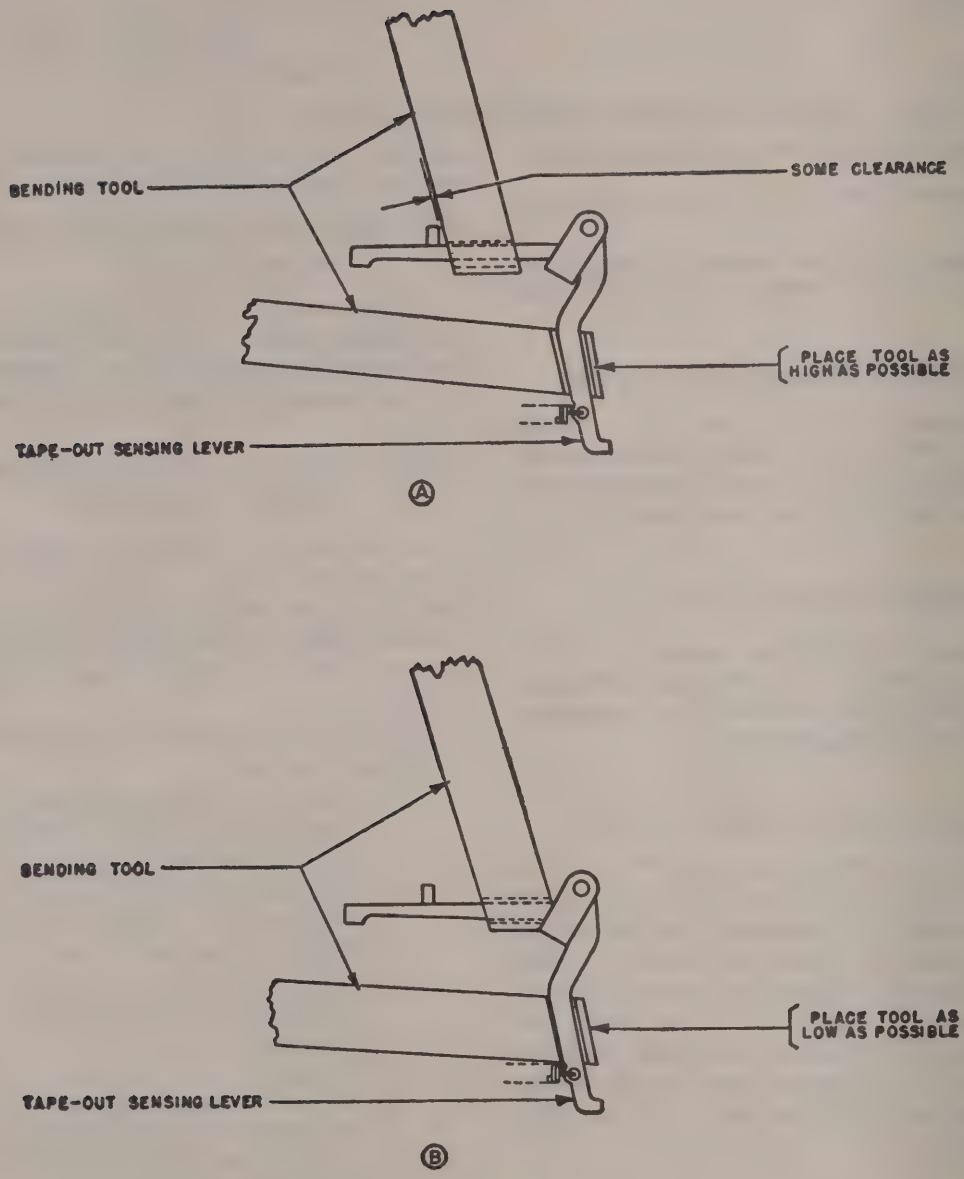

TM 2203-CI-2

Figure 87.1 (Added.) *Tape-out sensing lever.*

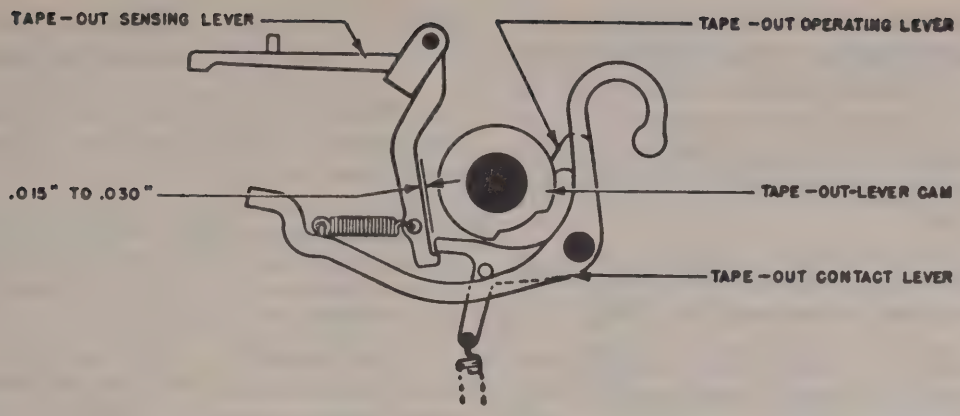

Figure 87.2 (Added.) *Tape-out contact lever.*

188. Selector-Lever Bail Spring Tension (fig. 83)

a. REQUIREMENT. With the transmitting-cam * * * selector-lever bail moving. **With equipment procured on Order No. 9838–Phila–48, a 32-ounce scale should be used in place of the 8-ounce scale; it should require at least 10 ounces to start the selector-lever bail moving.**

* * * * *

189. Selector-Lever Spring Tension (fig. 83)

a. REQUIREMENT. With the selector-lever * * * the pin moving. **With equipment procured on Order No. 9838–Phila–48, it should require 3¼ to 3¾ ounces to push the selector lever pin downward until it is flush with the upper surface of the tape guide slot in the top plate.**

* * * * *

191. Feed-Wheel Detent (fig. 88)

a. REQUIREMENT. With a piece * * * in the perforations. **With equipment procured on Order No. 9838–Phila–48, select a piece of tape (regular or chadless tape) with a series of letters perforations checked for 10 holes to the inch. With the detent roller resting in an indent between two teeth of the feed wheel ratchet, rotate the cam sleeve until the tape pins are flush with the bottom of the tape. Engage the feed perforations of the tape with the feed wheel so that the letters perforations are directly over the tape pins. When the play of the tape on the feed wheel is taken up in the direction of rotation of the feed wheel, the tape sensing pin with the minimum clearance in its code hole should just clear the trailing edge of its code hole.**

* * * * *

194. Feed-Pawl Lever (fig. 88)

a. REQUIREMENT. With the transmitting-cam * * * the feed-wheel ratchet. **With equipment procured on Order No. 9838–Phila–48, with the transmitting-cam cylinder in the stop position, there should be some clearance, not more than 0.010 inch, between the feed pawl and the face of the ratchet tooth which has the least amount of clearance. Check throughout a complete revolution of the feed wheel.**

* * * * *

196. Feed-Pawl Spring Tension (fig. 88)

a. REQUIREMENT. With the transmitting-cam * * * the ratchet wheel. **With equipment procured on Order No. 9838–Phila–48, it should require 3½ to 4½ ounces to start the feed pawl moving away from the ratchet wheel.**

* * * * *

201.1 (Added.) **Letters Operating Lever** (fig. 90)

a. REQUIREMENT. With the cam sleeve in its stop position (clutch fully disengaged), there

should be 0.010-inch to 0.025-inch clearance between the end of the horizontal members of the selector levers and the horizontal section of the letters operating lever vertical extension.

b. Adjustment. Loosen the letters operating lever stud nut and position the stud in the bracket. Tighten the nut.

201.2 (Added.) Letters Operating Lever Vertical Extension (fig. 89.1)

a. Requirement. Rotate the transmitting cam cylinder until all selector lever pins are in their selected (uppermost) position and the letters operating lever horizontal extension is on the low part of its cam. Under this condition there should be a 0.020-inch to 0.040-inch clearance between the under side of the horizontal members of the selector lever and the top surface of the letters operating lever vertical extension.

b. Adjustment. Loosen the two vertical extension mounting screws and position the extension vertically to meet the foregoing requirement. Tighten the mounting screws and recheck the letters operating lever adjustment.

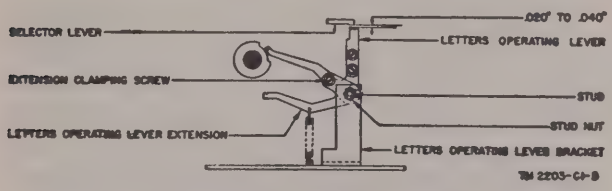

Figure 89.1 (Added.) *Letters sensing mechanism.*

208.1 (Added.) Alinement and Squareness of Governor Contacts

a. Preparation. Remove the governor adjusting bracket, brush spring plate, target, and governor cover.

Note. All governor contacts can be adjusted for alinement of edges; only those governor shells which provide elongated mounting holes for the fixed contact bracket permit adjustment of the contact for height by positioning the contact bracket.

b. Requirements. The governor contacts should be in line and meet squarely so that maximum contact surface is provided. (Check with the retractile spring tension adjusted so that the contacts just make, or to the limit of the adjusting screw.)

c. Adjustment.

(1) Line up the edges of the contacts by means of the floating contact hinge mounting screw.

(2) Adjust the contacts for squareness from right to left by positioning the height of the fixed contact bracket, using the elongated mounting holes in the governor shell.

(3) To adjust for squareness, from front to back, twist the floating contact hinge by applying pressure to the arm near the contact.

Note. With a 0.002-inch gage (smaller if available), check between edges of the contacts to see that the gage enters (or does not enter) equally on all sides.

APPENDIX II

PARTS IDENTIFICATION LISTS AND TABLES OF REPLACEABLE PARTS

* * * * *

5. Numerical Index to Parts Identification Illustrations for Multiple Transmitter Distributor and Base

All parts used * * * in the illustration.

Note. (Added.) The items added below pertain only to equipment procured on Order No. 9838–Phila–48.

Part No.	Name of part	Fig. No.
*	* * *	*
1026	Screw: 6–40 x ⅜	98, 107, 108
*	* * *	*
3640	Lockwasher	98 * * * 113, 115
*	* * *	*

Part No.	Name of part	Fig. No.
6345	Nut: hex; 6–32	115
6348	Screw: 4–36 x 3/4	115
*	* * *	*
6746	Screw: mach; 6–40 x 5/16	98, 102, 107, 114, 115
6811	Screw: 6–40 x 5/8	103, 107
6979	Hub	115
*	* * *	*
8253	Cable clamp	108
8254	Cable clamp	108
*	* * *	*
72096	Screw: pivot; 6–40	105
72563	Washer—felt	102
*	* * *	*
76284	Strap: 2 1/8" long (with 82474 terminals).	108
76379	Spring: extenison	101
*	* * *	*
78497	Inner disk contact spring	115
78533	Spring: extension	99
*	* * *	*
82702	Screw: 6–40 x 3/32	110
82725	Spring: extension	98
*	* * *	*
87398	Spacer	106
87638	Screw: 2–56 x 0.094	113
*	* * *	*
110979	Cable: governor circuit	115
111342	Spring: extension (100 wpm)	98
111464	Shim	99
116992	Screw: pilot 1/4–32	114
117901	Spring: clutch	102
118125AB	Base (gray-green wrinkle)	07, 108
118128AB	Cover plate (gray-green wrinkle).	113
118130AB	Motor cover (assem) (gray-green wrinkle)	113
118445AB	Cover: right (gray-green wrinkle)	113
118447AB	Cover: left (gray-green wrinkle)	113
118448AB	Cover: left rear (gray-green wrinkle)	113
119542AB	Cover: front (gray-green wrinkle)	113
119545AB	Bracket (gray-green wrinkle)	113
119569AB	Card holder bracket (assem) (gray-green wrinkle)	113

Figure 82: With equipment procured on Order No. 9838–Phila–48, change the requirement "9 to 12 ozs" to read "12 to 15 ozs."

Figure 83: With equipment procured on Order No. 9838–Phila–48, change the requirement "at least 5 ozs" to read "at least 10 ozs."

Figure 88: With equipment procured on Order No. 9838–Phila–48, change the requirement "1/2 to 2 ozs" to read "3 1/2 to 4 1/2 ozs."

Figure 98: With equipment procured on Order No. 9838–Phila–48, under M–177 magnet coil; list separately the "1028 screws" and "2438 washers."

Figure 98: With equipment procured on Order No. 9838–Phila–48, change the designation "55090 spring" to read "82725 spring"; and change "2836 spring" to read "111342 spring."

Figure 99: With equipment procured on Order No. 9838–Phila–48, change the designation "4703 spring" to read "78533 spring"; "8896 shim" to read "111464 shim"; and "60669 spring" to read "119904 spring."

Figure 101: With equipment procured on Order No. 9838–Phila–48, substitute "76379" spring for the "55090" spring in use.

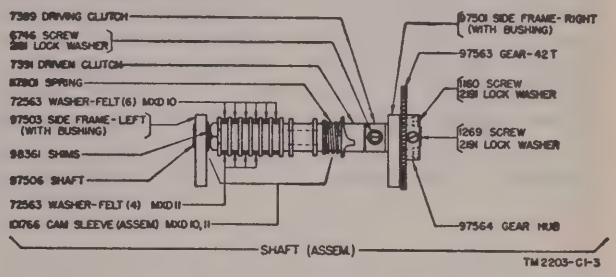

Figure 102.1 (Added.) *Shaft assembly, parts identification (applies to equipment procured on Order No. 9838–Phila–48).*

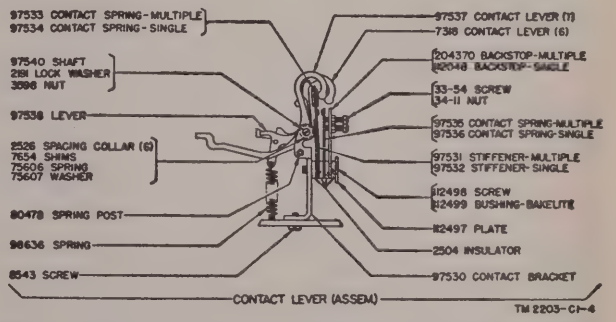

Figure 103.1 (Added.) *Contact lever assembly, parts identification (applies to equipment procured on Order No. 9838–Phila–48).*

Figure 107: With equipment procured on Order No. 9838–Phila–48, substitute "118125AB base, gray-green wrinkle" for the "110654" base used. At the lower right-hand side of this figure,

substitute a "6746" screw for the "82440" screw which mounts the 110726 gear guard. Add a 2191 lockwasher to the mounting parts.

Figure 108: With equipment procured on Order No. 9838–Phila–48, substitute "118125AB base, gray-green wrinkle" for the "110654" base used. Substitute "1026" screw for the "1269" screw used. Substitute "8254" cable clamp for the "8253" cable clamp used.

Figure 110: With equipment procured on Order No. 9838–Phila–48, delete the number 99250 and the line brackets inclosing the part numbers.

Figure 111: With equipment procured on Order No. 9838–Phila–48, delete the 82474 terminals.

Figure 113: With equipment procured on Order No. 9838–Phila–48, change the following designations:

Old designation	*New designation*
110679 cover, left rear	118448AB cover, left rear.
110678 cover, left	118447AB cover, left.
110676 cover, front (with tape guide).	119542AB cover, front.
110680 motor-cover assem	118130AB motor-cover assem.

[AG 300.7 (8 Mar. 49)]

Old designation	*New designation*
110772 cover plate	118128AB cover plate.
110677 cover, right	118445AB cover, right.
110957 card holder bracket assem.	119569AB card holder bracket assem.
103782 screw, drive	87638 screw, drive.
110956 bracket	119545AB bracket.

Figure 114: With equipment procured on Order No. 9838–Phila–48, substitute 116992 screw for the 1100 screw used. Attach the prefix (A) to the following parts in figure 114.

116992 screw.
104451 lockwasher.
8222 wearing strip.
7661 adjusting lever.
91617 shims.
84047 stop.
6746 screw.
2191 lockwasher.
8330 washer.
78301 screw.
2669 lockwasher.
84579 washer.
6746 screw.
2191 lockwasher.
110650 pinion.

Figure 14. Motor, parts identification (excludes parts marked (A); these parts must be ordered separately).

Figure 115: In the middle illustration, indicate the 6979 hub located in center of bottom side of the illustration. With equipment procured on Order No. 9838–Phila–48, delete the 72835 contact point; add 6348 screw and 3640 lockwasher to the 6330 bearing (assembly).

BY ORDER OF THE SECRETARIES OF THE ARMY AND THE AIR FORCE:

OFFICIAL:
EDWARD F. WITSELL
Major General
The Adjutant General

OMAR N. BRADLEY
Chief of Staff, United States Army

OFFICIAL:
L. L. JUDGE
Colonel, USAF
Air Adjutant General

HOYT S. VANDENBERG
Chief of Staff, United States Air Force

DISTRIBUTION:

Army:

Tech Sv (2); Arm & Sv Bd (1); AFF Bd (ea Sv Test Sec) (1); AFF (5); OS Maj Comd (5); Base Comd (3); MDW (5); A (ZI) (20); (Overseas) (5); CHQ (2); FC (2); USMA (2); Sch 11 (10); Gen Dep (10); Dep 11 (5) except Baltimore & Sacramento (20); Tng Ctr (2); PE (10), Overseas Supply Div (2); Lab 11 (2); 4th & 5th Ech Maint Shops 11 (2); T/O & E 11–47 (2); 11–107 (2); 11–127 (2); 11–587 (2); 11–592 (2); 11–597 (2); SPECIAL DISTRIBUTION.

Air Force:

Tq USAF (25); USAF Maj Comds (5); USAF Sub Comds (3); Services (MATS) (2); All other Class III Installations (2). Overseas: Maj Air Comds (5); Numbered Air Forces (3); Overseas Air Bases (2). Special Distribution: Commandant, AF Technical School (Communications) Scott Air Force Base, Belleville, Ill. (10).

For explanation of distribution formula see SR 310–90–1.

☆U. S. GOVERNMENT PRINTING OFFICE : 1951 O—924487

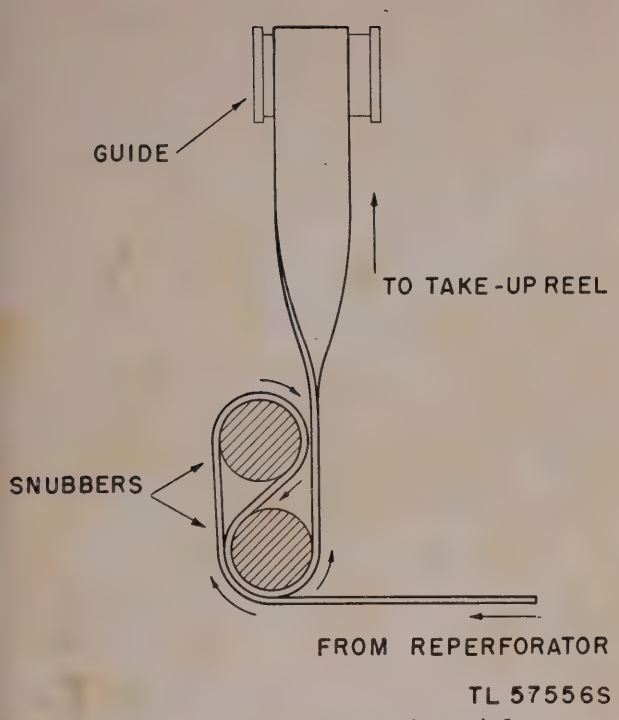

Figure 27. Installing tape on tape winder.

36. Setting Range Finders

The procedure for the setting of the range finder, after arrangements have been made to connect the selector magnet in a circuit where a long series of alternate R and Y impulses may be received, is always the same, regardless of the type of equipment. Therefore with a local test circuit set up as described in paragraph 40 and an R and Y test tape, it is possible to set the range finders of the typing reperforators. For detailed information on the setting of the range finders, see TM 11–2223.

37. Installing Ribbon in Typing Reperforators

Make sure the ribbon has a hook fastened to each end and a reversing eyelet securely fastened in the ribbon at each end about 4 inches from the hook. The spool may be either metal or fiber but it must have small holes placed around the center hole to engage the ribbon-spool driving pin on the ribbon-spool shaft. For a more detailed description of installing the ribbon in the typing reperforators, see TM 11–2223.

38. Checking and Adjusting Motor Speed

a. The typing reperforators of Teletypewriter Set AN/TGC–1 may be equipped with either a synchronous motor or a series-governed motor. If synchronous motors have been supplied, the motors will not require adjustment since they are already preset. If series-governed motors are supplied, the motors will require adjustment.

b. The typing reperforators of Teletypewriter Set AN/TGC–1A are equipped with series-governed motors and will require adjustment.

c. The motors of all teletypewriter sets whether in the same circuit or not must be set to operate at the same speed before satisfactory operation is possible. For a detailed description of checking and adjusting the motor speed, see TM 11–2223.

39. Preparing Number Tape

Before the multiple transmitter distributor may be put in operation, it will be necessary to prepare a number tape. The master tape is made up manually on tape-perforating equipment equipped with a keyboard, such as a Reperforator Transmitter TG–26–A. The number-content of the tape will depend on the traffic needs of the individual circuit, but 500 numbers will be sufficient for a day's work on even a heavy-traffic circuit.

a. The numbers are perforated on one single long tape and the form should be as follows: carriage return, line feed, office call, channel letter, figures, serial number, space, letters, blank, blank, blank, blank. This form is repeated for each consecutive number and it is important that there be no errors in the number tape.

Caution: If errors are erased by means of the letters key, the letters-sensing mechanism in the number transmitter unit will interpret incorrectly the letters code as indicating the termination of a number.

b. Once the master tape is made up, multiple copies may be obtained by running the master tape through the A or B transmitter and obtaining copies from the monitor reperforator.

c. Reel one copy of the number tape backwards on the number tape reel so that the low-numbered end (number 1) of the number tape may be inserted in the number transmitter unit. Raise the tape lid on the number transmitter unit and insert the low-numbered end of the number tape.

d. When working SPLIT, insert another copy of the prepared number tape in the number tab holder (fig. 4) for use with the B message transmitter. The number tape inserted in the number tab holder should be reeled backwards so that the

low number will be available for first use. Individual numbers are torn from the number tape and inserted manually in the B message transmitter preceding each message.

40. Local Operating Test

a. To make the local operating test, proceed as follows:

(1) At the line terminal strip, strap terminals 15 to 16, and 7 to 17.

(2) Between terminals 7 and 17 add a variable resistance of about 5,000 ohms and milliammeter in series. Adjust the resistance so that the current will be between 10 and 30 m. a.

(3) Throw the NORMAL SPLIT switch (SA) to NORMAL, the DUPLEX SINGLE switch (SB) to DUPLEX, the OPR. NON-OPR. switches (S1 and S2) to OPR., and the POLAR MAKE-BREAK switches (S3 and S4) to POLAR.

(4) Connect the line terminal strip for NORMAL DUPLEX POLAR operation as shown in figure 25.

b. Messages transmitted on the A (middle) and B (right-hand) message transmitters, with numbers interpolated by the number transmitter units, will be received on both the monitor (upper) and receiving (lower) typing reperforators.

Section VI. OPERATION

41. Starting Teletypewriter Sets AN/TGC–1 and AN/TGC–1A

With the source of power connected as described in paragraph 24, throw the main power switch in the power cabinet to the ON position. The typing reperforator motors and the multiple transmitter distributor motor should run. Throw the tape-winder toggle switch to the ON position. The tape-winder motor should run.

42. Normal Operation

When operating the teletypewriter sets to two external circuits, throw the NORMAL SPLIT switch to NORMAL.

a. Sending Numbered Messages.

(1) To send numbered messages from both message transmitters, proceed as follows:

(*a*) In the number of transmitter, install a prepared number tape as described in paragraph 39.

(*b*) Release the number transmitter start lever.

(*c*) Depress the A message transmitter start lever.

(*d*) Feed a message tape (par. 54) into the A message transmitter.

(*e*) Release the A transmitter start lever.

(*f*) Depress the B message transmitter start lever.

(*g*) Feed a message tape into the B message transmitter.

(*h*) Release the B transmitter start lever.

Note. The message transmitter start lever is depressed and released at the start of each message.

(2) A number will be sent from the number transmitter unit followed by a message from the A (or B) message transmitter unit. Meanwhile a second message tape may be inserted in the idle message transmitter unit. On completion of the first message, a new number will be sent followed by the second message. The transmitter units thus can be kept supplied with tape, and transmission will be continuous. All sent messages, with their numbers, will be recorded on the monitor (upper) typing reperforator and will be reeled up on the tape-winder take-up reel.

b. Sending Unnumbered Messages. To send a message without a number, feed the message tape into the A (or B) message transmitter unit and, before releasing the message transmitter start lever, depress the NUMBER RELEASE key and hold it depressed while releasing the message transmitter start lever. As soon as the message transmitter starts, the NUMBER RELEASE key may be released.

c. Receiving Messages. All incoming messages

are received on the receiving (lower) typing reperforator.

(1) Any time the typing reperforator is idle, tape may be fed out from the reperforator by depressing the TAPE FEED-OUT No. 2 key (FO–2). If, while the feed-out key is held depressed, signals are received from the line, the incoming signals will take control, disabling the feed-out function. (There is a possibility that the first character of the incoming signals may not be printed correctly.)

(2) When necessary to leave the set unattended, the ALARM OFF (Button Out) switch may be depressed (ON position). When a signal from the line is received, the white lamp on the signal indicator panel lights and the alarm bell rings.

43. Split Operation

When operating the teletypewriter set to four separate external circuits, throw the NORMAL SPLIT switch to SPLIT. The circuits may be operated duplex or single, polar or make-and-break, independently of each other. When working SPLIT, for the purposes of descriptiton, each full-duplex (four-wire) circuit will be considered as one circuit. Since the automatic numbering feature is on circuit No. 1, this circuit normally may carry the heavier traffic and mostly may be worked duplex. Circuit No. 2 more frequently may be worked single and therefore the special features of single working, namely the lock-out and break features described in paragraphs 105 and 107, are confined to circuit No. 2.

a. Circuit No. 1. Circuit No. 1 consists of the A message transmitter and the number transmitter, the A transmitting relay, and the receiving (lower) typing reperforator under control of REC–1 relay. Circuit No. 1 uses automatic numbering from the number transmitter.

(1) *Sending.* To send, proceed as follows:

(*a*) Install a prepared number tape in the number transmitter, as described in paragraph 39.

(*b*) Release the number transmitter start lever.

(*c*) Depress the A message transmitter start lever.

(*d*) Feed a message tape (par. 53) into the A message transmitter.

(*e*) Release the A transmitter start lever.

Note. The message transmitter start lever is depressed and released at the start of each message.

(2) *Receiving.* Reception for circuit No. 1 will be on the lower typing reperforator.

b. Circuit No. 2. Circuit No. 2 consists of the B message transmitter, the B transmitting relay, and the monitor (upper) typing reperforator under control of REC–2 relay. Circuit No. 2 uses tab numbering; the tab number holder is located adjacent to the B transmitter.

(1) *Sending.* To send, proceed as follows:

(*a*) From the prepared number tape (par. 39) in the tab number holder, tear off the number for the message.

(*b*) Depress the B message transmitter start lever.

(*c*) Feed the number tape into the B message transmitter.

(*d*) Release the B message transmitter start lever.

(*e*) After the message number has been transmitted, depress the B message transmitter start lever.

(*f*) Feed the message tape into the B message transmitter.

(*g*) Release the B message transmitter start lever.

(2) *Receiving.* Reception for circuit No. 2 will be on the upper typing reperforator.

c. Unconnected Circuit. If, when working SPLIT, one circuit is not connected, the OPR. NON-OPR. switch for the unconnected circuit will be thrown to NON-OPR. and the motor plug for the typing reperforator in the unconnected circuit will be pulled out. This use of the OPR. NON-OPR. switch prevents false operation of the alarm and break signals.

d. Sent Tapes. Since in split operation there is no monitor copy of transmitted messages, there is no record with the message of its transmitted number and, therefore, provision should be made in traffic routing for writing the numbers on the tapes as the tapes are transmitted. When working SPLIT, the large bin for sent tapes should be divided into two by means of the separator provided.

44. Setting Conditioning Switches for Normal Duplex Polar Operation

a. For operating normal duplex polar, set the conditioning switches in the equipment drawer to the following positions:

Switch	*Position*
NORMAL SPLIT	NORMAL.
DUPLEX SINGLE	DUPLEX.
POLAR MAKE-BREAK NO. 1	POLAR.
POLAR MAKE-BREAK NO. 2	POLAR.
OPR. NON-OPR. NO. 1	OPR.
OPR. NON-OPR. NO. 2	OPR.

b. The external line connections at the line terminal strip for normal duplex polar operations are given in paragraph 26.

c. Adjust the send and receive loop currents to read between 10 and 30 m. a., connecting external resistance as necessary. (If facilities for measuring current are not available at the local station, the current in the circuit may be adjusted by the distant station if facilities are available there.)

d. Transmission and reception are carried out as described in paragraph 42.

45. Setting Conditioning Switches for Normal Duplex Make-and-Break Operation

a. For operating normal duplex make-and-break, set the conditioning switches in the equipment drawer as follows:

Switch	*Position*
NORMAL SPLIT	NORMAL.
DUPLEX SINGLE	DUPLEX.
POLAR MAKE-BREAK NO. 1	MAKE-BREAK.
POLAR MAKE-BREAK NO. 2	MAKE-BREAK.
OPR. NON-OPR. NO. 1	OPR.
OPR. NON-OPR. NO. 2	OPR.

b. The external line connections at the line terminal strip for normal duplex make-and-break operation are explained in paragraph 27.

c. The loops are batteried externally and the current should be adjusted to 60 ma, connecting external resistance as necessary.

d. Transmission and reception are carried out as described in paragraph 42.

46. Setting Conditioning Switches for Normal Single Operation

a. For operating single to one external circuit, set the conditioning switches in the equipment drawer as follows:

Switch	*Position*
NORMAL SPLIT	NORMAL.
DUPLEX SINGLE	SINGLE.
POLAR MAKE-BREAK NO. 1	MAKE-BREAK.
POLAR MAKE-BREAK NO. 2	MAKE-BREAK.
OPR. NON-OPR. NO. 1	OPR.
OPR. NON-OPR. NO. 2	OPR.

b. The external line connections at the line terminal strip for normal single operation are described in paragraph 28.

c. The loop is batteried externally and the current should be adjusted to 60 ma, connecting external resistance as necessary.

d. Except for the transmitter locking function described below, transmission is carried out as described in paragraph 42.

(1) Since the single operation transmission and reception cannot be carried out simultaneously, the transmitters are locked out during reception; if the teletypewriter set is not transmitting, the transmitters are locked as soon as a signal is received from the line. (An incoming break signal (see (2) below) is the only signal with a no-current impulse of sufficient length to disable the transmitters while transmission is in progress.) The lighting of the red lamp on the signal indicator panel indicates that the transmitters are locked. The transmitters will remain locked until the RELEASE KEY (on the signal indicator panel) is depressed (par. 104*b*); the RELEASE KEY should not be depressed while reception is in progress. Tape may be inserted in the message transmitters in readiness for transmission, but the transmitters will not start until the RELEASE KEY is depressed.

(2) If, while transmission is in progress, a break signal is received from the distant station, the transmitters at the local station will be disabled and the red lamp will light, indicating that the transmitters are locked. Under this condition an incompletely sent message may be in the transmitter. After reception has been completed and before depressing the RELEASE KEY to resume transmission, set back the tape in the message transmitter to the beginning of the message and set back the number tape one number. To reposition the tapes in the number and

message transmitters, raise the tape lids on the number and message transmitter units.

e. Reception will be recorded on the receiving (lower) typing reperforator as described in paragraph 42*c*.

(1) If, during reception, it is desired to break the distant station, the BREAK KEY (on the signal indicator panel) is depressed and held depressed. This sends a long spacing impulse to the line, disabling the distant transmitters. Since the local transmitters already have been locked as described in *d* (1) above, the RELEASE KEY must be depressed before sending.

(2) Any time the typing reperforator is idle, tape may be fed out by means of TAPE FEED OUT NO. 2 key (FO–2).

47. Setting Conditioning Switches for Split Duplex Polar Operation, Circuit No. 1

a. For operating split duplex polar for circuit No. 1, set the conditioning switches in the equipment drawer to the following positions:

Switch	*Position*
NORMAL SPLIT	SPLIT
POLAR MAKE–BREAK NO. 1	POLAR.
OPR. NON-OPR. NO. 1	OPR.

Note. The position of the DUPLEX SINGLE switch affects only the No. 2 circuit, and the DUPLEX SINGLE switch will be thrown, therefore, according to the requirements of that circuit (par. 50).

b. The external line connections for split duplex polar operation are explained in paragraph 29.

c. Adjust the circuit No. 1 send and receive loop currents to read between 10 and 30 m. a., connecting external resistance as necessary.

d. Transmission and reception are carried out as described in paragraph 43*a*. In addition, the following will be noted:

(1) The B transmitter is not used on circuit No. 1.

(2) NO. 1 TAPE FEED-OUT key (on the signal indicator panel) is used to feed out tape from the lower typing reperforator.

(3) There is no monitor copy of transmission over circuit No. 1 since the monitor (upper) reperforator is not in the circuit of circuit No. 1.

48. Setting Conditioning Switches for Split Duplex Make-and-Break Operation, Circuit No. 1.

a. For operating split duplex make-and-break for circuit No. 1, set the conditioning switches in the equipment drawer to the following positions:

Switch	*Position*
NORMAL SPLIT	SPLIT.
POLAR MAKE–BREAK NO. 1	MAKE-BREAK.
OPR. NON-OPR. NO. 1	OPR.

b. The external line connections at the line terminal strip for split duplex make-and-break operation are explained in paragraph 30.

c. The circuit No. 1 loops are batteried externally and the current should be adjusted to 60 m. a., connecting external resistance as necessary.

d. Transmission and reception are carried out as described in paragraphs 43*a* and 43*d*.

49. Setting Conditioning Switches for Split Single Operation, Circuit No. 1

a. For operating single to two external circuits for circuit No. 1, set the conditioning switches in the equipment drawer to the following positions:

Switch	*Position*
NORMAL SPLIT	SPLIT.
POLAR MAKE–BREAK NO. 1	MAKE–BREAK.
OPR. NON-OPR. NO. 1	OPR.

b. The external line connections for split single operation are explained in paragraph 31.

c. The circuit No. 1 loop is batteried externally and the current should be adjusted to 60 m. a., connecting external resistance as necessary.

d. Transmission will be from the A message transmitter unit with automatic numbering from the number transmitter unit. Reception is on the lower typing reperforator. During reception the number and A transmitters are not locked and therefore messages should not be inserted in the A message transmitter during reception. A monitor copy of transmission is provided by the receiving (lower) typing reperforator. The NO. 1 TAPE FEED-OUT key is used to feed out tape from the receiving (lower) typing reperforator. There is no break feature.

50. Setting Conditioning Switches for Split Duplex Polar Operation, Circuit No. 2

a. For operating split duplex polar for circuit No. 2, set the conditioning switches in the equipment drawer to the following positions:

Switch	*Position*
NORMAL SPLIT	SPLIT.
DUPLEX SINGLE	DUPLEX.
POLAR MAKE-BREAK NO. 2	POLAR.
OPR. NON-OPR. NO. 2	OPR.

b. The external line connections for split duplex polar operation are explained in paragraph 29.

c. Adjust the circuit No. 2 send and receive loop currents to read between 10 and 30 m. a., connecting external resistance as necessary.

d. Transmission is from the B message transmitter unit, using tab numbering. Reception is on the upper typing reperforator. The TAPE FEED-OUT NO. 2 key is used to feed tape out of the typing reperforator.

51. Setting Conditioning Switches for Split Duplex Make-and-Break Operation, Circuit No. 2

a. For operating split duplex make-and-break for circuit No. 2, set the conditioning switches in the equipment drawer to the following positions:

Switch	*Position*
NORMAL SPLIT	SPLIT.
DUPLEX SINGLE	DUPLEX.
POLAR MAKE-BREAK NO. 2	MAKE-BREAK.
OPR. NON-OPR. NO. 2	OPR.

b. The external line connections for split duplex make-and-break operation are explained in paragraph 30.

c. The circuit No. 2 loops are batteried externally and the current should be adjusted to 60 m. a., connecting external resistance as necessary.

d. Transmission and reception are carried out as described in paragraph 43*b*.

52. Setting Conditioning Switches for Split Single Operation, Circuit No. 2

a. For operating single to two external circuits for circuit No. 2, set the conditioning switches in the equipment drawer to the following positions:

Switch	*Position*
NORMAL SPLIT	SPLIT.
DUPLEX SINGLE	SINGLE.
POLAR MAKE-BREAK NO. 2	MAKE-BREAK.
OPR. NON-OPR. NO. 2	OPR.

b. The external line connections for split single operation are explained in paragraph 31.

c. The circuit No. 2 loop is batteried externally and the current should be adjusted to 60 m. a., connecting external resistance as necessary.

d. Transmission is from the B message transmitter unit, using tab numbering. Reception is on the upper typing reperforator. The transmitter is locked during reception, with the red light on the signal indicator panel lighting when the transmitter is locked (par. 46*d*). Therefore tape may be fed into the message transmitter during reception in readiness to start transmitting. The break feature (par. 46*e*) is operable in either direction.

53. Preparing and Inserting Message Tapes

a. Preparing Message Tape. All stations, when originating traffic, prepare the tape in a prescribed uniform manner in the following sequence:

(1) Preamble machine functions, which consist of spaces, carriage returns, and line feed, form the leader end of the message tape and facilitate feeding the tape into the transmitter.
(2) Message heading.
(3) Message text.
(4) Message ending.
(5) Uniform number of machine functions consisting of carriage returns, line feeds, and letters, in order listed, follow the message ending.

b. Inserting Message Tape. To transmit a message tape, proceed as follows:

(1) Depress the message transmitter start lever of either the A or B message transmitter unit.
(2) Insert the leader end of the tape into the groove beneath the tape lid and slide the tape forward until the first perforated character reaches, but does not pass, the black line appearing on the lid.

Note. Remember that any characters on the tape beyond the black line on the tape lid will not be transmitted.

54. Message Procedures

a. Handling the Received Message. Each received message is torn at the last letter key perforation. Fold the tape on the last letter key perforation and then tear; folding the tape before tearing

prevents undue pressure on the roller feed in the typing reperforator.

b. Recording the Received Message. To record incoming messages, a number sheet will be prepared. As individual incoming tapes are removed from the receiving typing reperforator, the operator marks off the number of the received message on the number sheet by drawing a horizontal line through the number on the number sheet which corresponds to the number appearing on the message tape. This procedure provides a means of recording, by number, the messages received on the circuit. When operating SPLIT, the number sheets will be prepared in such manner that there will be a record, by number, of the messages being received on each channel. After the message number has been recorded, place the tape in the spring tape holder for routing to the designated outgoing circuit or room channel.

c. Interruption of Traffic by Local Operator. Should it become necessary to stop the reception of traffic when operating single to another AN/TGC–1 (or AN/TGC–1A), proceed as follows:

(1) Perforate a stop notice and transmit it to the distant station. The stop notice will include the reason for stopping reception. Precede and follow the stop notice by bell signals.

(2) Depress the BREAK KEY on the signal indicator panel. Depressing the BREAK KEY will stop the transmitter at the distant station; the red break lamp on the signal indicator panel will light at the distant station thus indicating that its transmitter is locked.

Note. In operating SPLIT SINGLE, there is no break feature on circuit No. 1. If it is desired to break transmission on circuit No. 1, a stop notice may be transmitted to the distant station requesting that transmission from that station be interrupted on circuit No. 1, and a dummy plug may be inserted in jack MJ–3, opening the circuit (par. 102).

(3) As soon as practicable thereafter, transmit a *go-ahead* notice.

d. Interruptions of Traffic by Distant Operator. If it becomes necessary for the distant station to interrupt transmission from the local station, operation of the BREAK KEY at the distant station will disable the transmitters at the local station and will light the red break lamp adjacent to the RELEASE KEY on the signal indicator panel of the local teletypewriter set. To resume transmission, proceed as follows:

(1) Reposition the number and message tapes as described in paragraph 46*d*(2). Care in repositioning the tapes will prevent duplication or missing of numbers and loss or incomplete transmission of messages.

(2) Start the transmitter units by depressing the RELEASE KEY.

Caution: Never depress the RELEASE KEY while traffic is being received from the distant station. Depressing the RELEASE KEY activates the local transmitter unit, which will interrupt the reception of traffic.

55. Emergency Operation

a. This paragraph discusses temporary expedients for maintaining some degree of service over the teletypewriter system in case of emergencies involving failure of—

(1) Upper typing reperforator.
(2) Lower typing reperforator.
(3) Individual transmitter units.

b. For emergency operation when the monitor (upper) typing reperforator does not operate, proceed as follows:

(1) Remove the upper typing reperforator plug from jack PJ–1.

(2) Plug the red (receive) plug of Teletypewriter TT–5/FG, or similar teletypewriter equipment, into the UPPER REPERF jack of the monitor jack box. A monitor copy of outgoing transmission will be provided on Teletypewriter TT–5/FG.

c. For emergency operation when the receiving (lower) typing reperforator does not operate, proceed as follows:

(1) Remove the lower typing reperforator plug from jack PJ–2.

(2) Plug the red (receive) plug of the typing reperforator of a Teletypewriter Set TC–16, or similar equipment, into the LOWER REPERF jack of the monitor jack box. Incoming traffic will be recorded on the plugged-in typing reperforator.

d. For emergency operation when any one of

the transmitter units fails to operate, proceed as follows:

(1) If the number transmitter does not function, number the messages going out from the message transmitters by inserting number tabs manually.

(2) If the A message transmitter fails to operate and the trouble is not electrical, use the B message transmitter for sending.

(3) If the B message transmitter fails to operate and the trouble is not electrical, use the A message transmitter for sending.

Section VII. ROUTINE CHECKS OF PERFORMANCE

56. Records

a. It is advisable to maintain a record at each station showing troubles encountered in the operation of teletypewriter sets. This record will show the type of operation troubles found and when and how they were cleared. Such records will indicate which equipment and circuits should be given the most attention and also will be useful in helping to locate conditions causing circuit failure.

b. Forms for recording such data may be improvised and should be made to cover any trouble in transmission or reception encountered in over-all system line-up tests and operating adjustments. The form may be designed to record the results of a single day's trouble adjustments, if sufficient trouble is encountered to make a daily record necessary, or it may be designed to record the trouble encountered and cleared over a period of several days. Under some circumstances it may be desirable to maintain a record of the operation of individual major components separately from that of the complete teletypewriter set.

57. Instructions on Use of Equipment Performance Check Lists

The equipment performance check lists (pars. 58 through 62) will help the operator to determine whether Teletypewriter Set AN/TGC–1 (or AN/TGC–1A) is functioning properly. The check lists give the item to be checked, the normal indications and tolerances of correct operation, and corrective measures that the operator may take.

a. Action or Condition. For some items, the information given in the action or condition column consists of the various switch and control settings under which the item is to be checked. For other items, it represents an action that must be taken in order to check the normal indication given in the normal indication column.

b. Normal Indications. The normal indications listed include the visible and audible signs that the operator will perceive when he checks the items. If the indications are not normal, the operator will apply the recommended corrective measures.

c. Corrective Measures. The corrective measures listed are those that the operator can make without turning the equipment in for repairs. A reference to part five indicates that the trouble cannot be corrected during operation and that trouble shooting by an experienced repairman is called for. If the set is completely inoperative or if the recommended corrective measures do not yield results, trouble shooting is necessary. However, if the tactical situation requires that communication be maintained and if the set is not completely inoperative, the operator must maintain the equipment in operation as long as it is possible to do so.

58. Equipment Performance Check List for Teletypewriter Set AN/TGC–1 or AN/TGC–1A

	Item No.	Item	Action or condition	Normal indication	Corrective measures
	1	Power plugs.	Power plugs in their respective sockets in accordance with par. 22.		
	2	Signal plugs.	Signal plugs in their respective jacks in accordance with par. 22.		

	Item No.	Item	Action or condition	Normal indication	Corrective measures
PREPARATORY	3	Jones plugs.	27- and 30-pin plugs in equipment drawer; 8-pin plug of transmitter unit and 27-pin plug of signal indicator unit in their respective sockets in accordance with par. 22.		
	4	Power cord.	Connect to power supply.		
	5	AC-DC power switches.	Operate both power switches on power panel to position required for type of power supply used.		
	6	Line connections.	Refer to section IV and figure 25 for connections for type of operation used.		
	7	NORMAL SPLIT switch (SA).	NORMAL SPLIT switch set as described in section VI.		
	8	DUPLEX SINGLE switch (SB).	DUPLEX SINGLE switch set as described in section VI.		
PREPARATORY	9	OPR. NON-OPR. switches (S1 and S2).	OPR. NON-OPR. switches set as described in section VI.		
	10	POLAR MAKE-BREAK switches (S3 and S4).	POLAR MAKE-BREAK switches set as described in section VI.		
	11	Reperforator tape	Upper and lower typing reperforators provided with tape.		Insert new roll of tape.
	12	Reperforator ribbons.	Upper and lower typing reperforators provided with ribbons.	Typewritten characters will be clear and legible.	Install new ribbons.
	13	Number tape.	Prepared as described in par. 39, wound on number-tape reel.	Numbers are sent preceding each message.	See part five.

59. Equipment Performance Check List for Normal Duplex Operation

	Item No.	Item	Action or condition	Normal indication	Corrective measures
START	1	NORMAL SPLIT switch (SA).	Turn to NORMAL.		
	2	DUPLEX SINGLE switch (SB).	Turn to DUPLEX.		
	3	OPR. NON-OPR. switches (S1 and S2).	Throw to OPR.		
	4	POLAR MAKE-BREAK switches (S3 and S4).	Throw to POLAR.		

	Item No.	Item	Action or condition	Normal indication	Corrective measures
START	5	Line terminal strip.	Make connections from column 1, fig. 25; strap 15 to 16, 7 to 17 placing a 5,000-ohm variable resistor and a 0- to 100-m. a. milliammeter in series between 7 and 17.	When main power switch is thrown to ON (item 6) milliammeter indicates line current; adjust resistor to permit line current of 10 to 30 m. a.	Check line connections, section IV.
	6	Main power switch.	Throw main power switch to ON.	Typing reperforator and multiple transmitter distributor motors run.	See part five.
	7	Tape-winder switch.	Throw the tape-winder switch to ON.	Tape-winder motor runs.	See part five.
EQUIPMENT PERFORMANCE	8	Number transmitter unit.	*a.* Release number start lever NB on number transmitter unit. *b.* Depress start lever MB on A or B message transmitter unit. *c.* Insert a test tape in A or B message transmitter unit. *d.* Release start lever MB on A or B message transmitter unit.	Number is transmitted to receiving and monitoring typing reperforators.	See part five.
	9	A or B message transmitter unit.		Message is received on receiving and monitoring typing reperforators.	See part five.
	10	Tape winder.	Monitor copy being received on upper typing reperforator.	Tape winds on take-up reel of tape winder.	See part five.
	11	NUMBER RELEASE key.	Depress NUMBER RELEASE key and start lever MB of the A or B message transmitter unit.	Number is not transmitted to receiving and monitoring typing reperforators.	See part five.
	12	No. 1 TAPE FEED-OUT key FO–1.	Depress No. 1 TAPE FEED-OUT key FO–1.	Tape feeds out from monitor typing reperforator.	See part five.
	13	TAPE FEED-OUT No. 2 key FO–2.	Depress TAPE FEED-OUT No. 2 key FO–2.	Tape feeds out from receiving typing reperforator.	See part five.
	14	ALARM OFF (Button Out) key.	Depress ALARM OFF key; message is being transmitted on A or B transmitter and received on receiving typing reperforator.	Alarm bell rings and white light is illuminated.	See part five.
	15	RELEASE KEY.	*a.* When main power switch is first thrown to ON or when main power switch is thrown to OFF and then back to ON. *b.* Depress RELEASE KEY.	*a.* Red (break) lamp is illuminated indicating transmitter units are locked out. *b.* Red (break) lamp is extinguished; transmitters are unlocked.	See part five.
	16	BREAK KEY.	Depress BREAK KEY.	Opens test circuit; upper and lower typing reperforators run open.	See part five.
STOP	17	Stopping teletypewriter set.	Throw main power switch to OFF.	Lamps go out; motors stop.	

60. Equipment Performance Check List for Split Duplex Operation

	Item No.	Item	Action or condition	Normal indication	Corrective measures
START	1	NORMAL SPLIT switch (SA).	Turn to SPLIT.		
	2	DUPLEX SINGLE switch (SB).	Turn to DUPLEX.		
	3	OPR. NON-OPR. switches (S1 and S2).	Throw to OPR.		
	4	POLAR MAKE-BREAK switches (S3 and S4).	Throw to POLAR.		
	5	Line terminal strip.	Make connections from column 4, fig. 25; strap 6 to 7 and 1 to 8, placing a 5,000-ohm variable resistor and a 0- to 100-m. a. milliammeter in series between 1 and 8. Strap 15 to 16 and 10 to 17 placing a 5,000-ohm variable resistor and a 0- to 100-m. a. milliammeter in series between 10 and 17.	When main power switch is thrown to ON (item 6 below) milliammeter indicates line current; adjust resistor to permit line current of 10 to 30 m. a.	Check line connections, section IV.
	6	Main power switch.	Throw main power switch to ON.	Typing reperforator and multiple transmitter distributor motors run.	See part five.
	7	Tape-winder switch.	Throw tape-winder switch to ON.	Tape-winder motor runs.	See part five.
EQUIPMENT PERFORMANCE	8	Number transmitter unit.	*a.* Release number start lever NB on number transmitter unit. *b.* Depress start lever MB on A message transmitter unit.	Number is sent from number transmitter to lower typing reperforator (circuit No. 1).	See part five.
	9	A message transmitter unit and lower typing reperforator.	*c.* Insert a test tape in the A message transmitter unit. *d.* Release start lever MB on A message transmitter unit.	Message is transmitted from A transmitter and received on lower typing reperforator (circuit No. 1).	See part five.
	10	B message transmitter unit and upper typing reperforator.	*a.* Depress start lever MB on B message transmitter unit. *b.* Feed test tape into B message transmitter unit. *c.* Release start lever MB on B message transmitter unit.	Message is transmitted from B transmitter and received on upper typing reperforator (circuit No. 2).	See part five.
	11	NUMBER RELEASE key.	Depress NUMBER RELEASE key and start lever MB on the A message transmitter unit.	Number is not transmitted to receiving (lower) typing reperforator (circuit No. 1).	See part five.
	12	No. 1 TAPE FEED-OUT key FO–1.	Depress No. 1 TAPE FEED-OUT key FO–1.	Tape feeds out on lower typing reperforator.	See part five.

	Item No.	Item	Action or condition	Normal indication	Corrective measures
EQUIPMENT PERFORMANCE	13	TAPE FEED-OUT No. 2 key FO–2.	Depress TAPE FEED-OUT No. 2 key FO–2.	Tape feeds out on upper typing reperforator.	See part five.
	14	ALARM OFF (Button Out) key.	Depress ALARM OFF key; receive messages on either the lower or upper typing reperforator.	Alarm bell rings and white alarm lamp is illuminated when messages are received on circuit No. 1 and circuit No. 2.	See part five.
	15	RELEASE KEY.	*a.* When main power switch is first thrown to ON or when main power switch is thrown to OFF and then to ON. *b.* Depress RELEASE KEY.	*a.* Red (break) lamp is illuminated indicating B message transmitter is locked out *b.* Red (break) lamp is extinguished; B transmitter is unlocked.	See part five.
	16	BREAK KEY.	Depress BREAK KEY.	Break signal sent on circuit No. 2; upper typing reperforator runs open.	See part five.
STOP	17	Stopping teletypewriter set.	Throw main power switch to OFF.	Lamps go out; motors stop.	

61. Equipment Performance Check List for Normal Single Operation

	Item No.	Item	Action or condition	Normal indication	Corrective measures
	1	NORMAL SPLIT switch (SA).	Turn to NORMAL.		
	2	DUPLEX SINGLE switch (SB).	Turn to SINGLE.		
	3	OPR. NON-OPR. switches (S1 and S2).	Throw to OPR.		
START	4	POLAR MAKE-BREAK switches (S3 and S4).	Throw to MAKE-BREAK.		
	5	Line terminal strip.	Make connections from Column 3, fig. 25. Connect terminals 7 and 17 to a sending-receiving teletypewriter set.		Check line connections, section IV.
	6	Main power switch.	Throw main power switch to ON.	Typing reperforator and transmitter motors run.	See part five.
	7	Tape-winder switch.	Throw tape-winder switch to ON.	Tape-winder motor runs.	See part five.

Item No.	Item	Action or condition	Normal indication	Corrective measures
8	Number transmitter unit.	*a.* Release number start lever NB on number transmitter unit. *b.* Depress start lever MB on A or B message transmitter unit. *c.* Insert a test tape in the A or B message transmitter unit. *d.* Release start lever MB on A or B message transmitter unit.	Number sent from number transmitter unit to teletypewriter set (see item 5 above).	See part five.
9	A and B transmitter units.		Message is sent to teletypewriter set (item 5 above). Upon completion of first message a new number is sent followed by message from second transmitter unit.	See part five.
10	Monitor (upper) typing reperforator.	Messages being transmitted from A and B transmitters.	Copy of outgoing messages received on monitor (upper) typing reperforator.	See part five.
11	Tape winder.	Monitor copy of outgoing message being received on upper typing reperforator.	Tape winds on take-up reel of tape winder.	See part five.
12	Receiving (lower) typing reperforator.	Message being transmitted from teletypewriter set (item 5 above).	Message is received on lower typing reperforator only.	See part five.
13	A and B transmitter units.	Message being transmitted from teletypewriter set (item 5 above).	During reception of message, transmitter units and monitor (upper) typing reperforator are locked out.	See part five.
14	Red (break) lamp.	Message being transmitted from teletypewriter set (item 5 above).	During reception of message red (break) lamp is illuminated.	See part five.
15	RELEASE KEY.	Transmitter units locked out; red (break) light illuminated; depress RELEASE KEY.	Transmitter units and upper typing reperforator unlock; red light is extinguished.	See part five.
16	A and B message transmitter units.	Break signal being sent from teletypewriter set while A or B transmitter is transmitting.	Red lamp is illuminated; transmitter is locked out.	See part five.
17	NUMBER RELEASE key.	Depress NUMBER RELEASE key and depress and release start lever MB on A or B message transmitter unit.	Number is not transmitted to teletypewriter set (see item 5 above).	See part five.
18	No. 1 TAPE FEED-OUT key FO–1.	Depress No. 1 TAPE FEED-OUT key FO–1.	Tape feeds out from upper typing reperforator.	See part five.
19	TAPE FEED-OUT No. 2 key FO–2.	Depress TAPE FEED-OUT No. 2 key FO–2.	Tape feeds out from lower typing reperforator.	See part five.
20	ALARM OFF (Button Out) key.	Depress ALARM OFF key; receive message from teletypewriter set (item 5 above).	Alarm bell rings; white light is illuminated.	See part five.
21	BREAK KEY.	Depress BREAK KEY.	Teletypewriter set (item 5 above) and upper typing reperforator run open.	See part five.

	Item No.	Item	Action or condition	Normal indication	Corrective measures
STOP	22	Stopping teletypewriter packaged unit.	Throw main power switch to OFF.	Lamps go out; motors stop.	See part five.

62. Equipment Performance Check List for Split Single Operation

	Item No.	Item	Action or condition	Normal indication	Corrective measures
START	1	NORMAL SPLIT switch (SA).	Turn to SPLIT.		
	2	DUPLEX SINGLE switch (SB).	Turn to SINGLE.		
	3	OPR. NON-OPR. switches (S1 and S2).	Throw to OPR.		
	4	POLAR MAKE-BREAK switches (S3 and S4).	Throw to MAKE-BREAK.		
	5	Line terminal strip.	Make connections from column 6, fig. 25; connect terminals 1 and 8 to a sending-receiving teletypewriter set (circuit No. 1). Connect terminals 10 and 17 to a sending-receiving teletypewriter set (circuit No. 2).		Check line connections, section IV.
	6	Main power switch.	Throw main power switch to ON.	Reperforator and multiple transmitter distributor motors run.	See part five.
	7	Tape-winder switch.	Throw tape-winder switch to ON.	Tape-winder motor runs.	See part five.
EQUIPMENT PERFORMANCE	8	Number transmitter unit.	*a.* Release number start lever NB on number transmitter unit. *b.* Depress start lever MB on A message transmitter unit. *c.* Insert test tape in A message transmitter unit. *d.* Release start lever MB on A message transmitter unit.	Number transmitted to circuit No. 1.	See part five.
	9	A message transmitter unit.		Message transmitted on circuit No. 1; lower typing reperforator provides a monitor copy.	See part five.
	10	B message transmitter unit.	*a.* Depress start lever MB on B message transmitter unit. *b.* Insert test tape in B message transmitter unit. *c.* Release start lever MB on B message transmitter unit.	Message transmitted on circuit No. 2.	See part five.

	Item No.	Item	Action or condition	Normal indication	Corrective measures
EQUIPMENT PERFORMANCE	11	Lower typing reperforator.	Receiving message on circuit No. 1. Monitors outgoing messages of A message transmitter unit (circuit No. 1).	*a.* Reception is on lower typing reperforator. *b.* Lower typing reperforator furnishes copy of messages transmitted.	See part five.
	12	Upper typing reperforator.	Receiving message on circuit No. 2.	Reception is on upper typing reperforator.	See part five.
	13	B message transmitter unit.	Message being received on upper typing reperforator.	B message transmitter unit is locked out and red (break) lamp illuminated.	See part five.
	14	RELEASE KEY.	Transmitter unit locked; red lamp lighted; depress RELEASE KEY.	Red (break) lamp is extinguished and B transmitter unlocked.	See part five.
	15	B message transmitter unit.	Transmitting message from B transmitter unit; receive break signal on circuit No. 2.	Red lamp is illuminated; B message transmitter unit is locked out.	See part five.
	16	No. 1 TAPE FEED-OUT key FO–1.	Depress No. 1 TAPE FEED-OUT key FO–1.	Tape feeds out on lower typing reperforator.	See part five.
	17	TAPE FEED-OUT No. 2 key FO–2.	Depress TAPE FEED-OUT No. 2 key FO–2.	Tape feeds out on upper typing reperforator.	See part five.
	18	NUMBER RELEASE key.	Depress NUMBER RELEASE key and start lever MB on A message transmitter unit.	Number not transmitted to circuit No. 1.	See part five.
	19	ALARM OFF (Button Out) key.	Depress ALARM OFF key; receive message on either lower or upper typing reperforator (circuit No. 1 or No. 2).	Alarm bell rings and white lamp is illuminated.	See part five.
	20	BREAK KEY.	Depress BREAK KEY.	Break signal received on circuit No. 2.	See part five.
STOP	21	Stopping teletypewriter set.	Throw main power switch to OFF.	Lamps go out; motors stop.	See part five.

PART THREE
PREVENTIVE MAINTENANCE

Section VIII. PREVENTIVE MAINTENANCE TECHNIQUES

63. Meaning of Preventive Maintenance

Preventive maintenance is a systematic series of operations performed periodically on equipment to maintain top efficiency in performance, to minimize unwanted interruptions in service, and to eliminate major break-downs. To understand what is meant by preventive maintenance, it is necessary to distinguish preventive maintenance from trouble locating and repair. The primary function of preventive maintenance is to *prevent* break-downs and the need for repair. On the other hand, the primary function of trouble locating and repair is to locate and *correct existing* defects. Preventive maintenance is of utmost importance. The usefulness of the entire system of communication depends upon equipment being ready to operate at peak efficiency when needed.

Note. The operations in this section are first and second echelon (organization operators and repairmen) maintenance. Some operations in section XI are higher echelon maintenance.

64. Description of Preventive Maintenance Techniques

a. General.

(1) Most of the parts used in Teletypewriter Set AN/TGC–1 (or AN/TGC–1A) require routine preventive maintenance of one kind or another. Because maintenance techniques cannot be applied indiscriminately, definite and specific instructions are needed. This section of the manual contains this type of specific instruction and serves as a guide for personnel assigned to perform the six basic maintenance operations—FEEL, INSPECT, TIGHTEN, CLEAN, ADJUST, and LUBRICATE. Throughout this manual the lettering system for the six operations will be as follows:

F—Feel.
I—Inspect.
T—Tighten.
C—Clean.
A—Adjust.
L—Lubricate.

(2) The first two operations establish the need for the other four. The selection of operations is based on a general knowledge of field requirements. For example, rapid changes in climatic conditions (such as heavy rains followed by blistering heat) or excessive dampness, snow, and ice tend to cause deterioration of exposed surfaces and parts. Without frequent inspection and the necessary tightening, cleaning, and lubricating, equipment becomes undependable and may break down when it is most needed.

b. Feel (F). The *feel* operation is used to determine if electrical connections, transformers, motors, etc., are overheated. Feeling indicates the existence of some type of defect requiring correction. The maintenance man must become familiar with the normal operating temperatures of transformers, motors, etc., in order to recognize signs of overheating.

Note. It is important that the *feel* operation be performed as soon as possible after the shut-down and always before any other maintenance is done.

c. Inspect (I).

(1) *General.* Inspection is the most important operation in the preventive maintenance program. A careless observer will overlook the evidences of minor trouble and, although these defects may not interfere with performance of the equipment, valuable time and effort can be saved if trouble is corrected before it leads to major break-downs. Make every effort to become thoroughly familiar with the indications of normal function-

ing in order to be able to recognize defective operation of the equipment.

(2) *Inspection.* Inspection consists of carefully observing all parts in the equipment, noticing their color, placement, cleanliness, etc. Inspect for the following conditions:

(*a*) Overheating, as indicated by discoloration, blistering, or bulging of the part or surface of the container, leakage of insulating compounds, and oxidation of metal contact surfaces.

(*b*) Improper placement, by observing that all leads and cabling are in their original positions.

(*c*) Lack of cleanliness, by carefully examining all recesses in the units for accumulated dust, especially between connecting terminals. Parts, connections, and joints should be free of dust, corrosion, and other foreign matter. In tropical and high-humidity locations, look for fungus growth and mildew.

(*d*) Looseness, by testing any connection or mounting which appears to be loose or by feeling the lug or terminal screw.

d. Tighten (T). Any movement of the equipment caused by its transportation, by concussion from falling shells, or by vibration from moving machinery may result in loose connections which are likely to impair the operation of the teletypewriter set. The importance of firm mountings and connections cannot be overemphasized. However, never tighten screws, bolts, and nuts unless it is known definitely that they are loose. Fittings that are tightened beyond the pressure for which they are designed will be damaged or broken. When tightening, always be certain to use the correct tool of the proper size.

e. Clean (C). When the schedule calls for a cleaning operation, it does not mean that every item which bears that identifying letter must be cleaned each time it is inspected. Clean parts only when inspection shows that it is necessary. The cleaning operation to be performed on each part is described in the paragraph pertaining to that item.

Note. Gasoline will not be used as a cleaning fluid for any purpose. Solvent, dry-cleaning, is available as a cleaning fluid through established supply channels.

f. Adjust (A). Adjustments are made only when necessary to restore normal operating conditions. Specific types of adjustment are described in the paragraph pertaining to the particular item.

g. Lubricate (L). Lubrication means the addition of oil or grease to form a film between two surfaces that slide against each other, in order to prevent mechanical wear from friction. Generally, lubrication is performed only on motors, engines, and shafts.

65. Preventive Maintenance Schedules

a. Prepare a chart showing the various teletypewriter sets in the installation, the average number of hours of operation daily, the dates routine maintenance operations are scheduled, the dates the maintenance operations are completed, and the initials or other designation of the person completing the maintenance operations. If desired, one chart may be prepared to cover each teletypewriter set. Base the schedule upon accurate information and revise it from time to time as conditions change. The record form used may cover time intervals of 1 month, 2 months, or any other interval desired by the officer in charge of the installation. The recommended time intervals for equipment maintenance checks are—

(1) Equipment in operation 12 to 24 hours daily, inspect every 10 days.

(2) Equipment in operation 8 to 12 hours daily, inspect every 15 days.

(3) Equipment in operation 8 hours or less daily, inspect every 30 days.

b. The above time intervals for maintenance checks of equipment are based on operating conditions where the temperature is moderate and the air is relatively free from dirt, sand, and excessive amounts of dust and moisture. When equipment is being operated in localities where there are extreme temperatures, excessive moisture, dust, dirt, sand, or other adverse conditions, routine schedules for inspection will be established for whatever intervals are necessary to keep the equipment in satisfactory operating condition.

c. When 600 o. p. m. is used instead of 368 o. p. m., the scheduling of routine maintenance checks will be arranged to compensate for the additional wear involved. Normally the time between checks will be reduced to about one-third of the period used at 368 o. p. m.

Figure 28. Tools and materials contained in Tool Equipment TE–50.

66. Preventive Maintenance Tools and Materials

Note. Before starting preventive maintenance, have on hand all tools and materials needed in performing the operations listed in the preventive maintenance check list (par. 81).

a. Tools. All required tools are furnished with Tool Equipment TE–50 (fig. 28), which is especially designed for maintenance of teletypewriter equipment. The list of tools and materials contained in Tool Equipment TE–50 is as follows:

*Tools and Materials Contained in Tool Equipment TE–50**

Ref. No.**	Signal Corps stock No.	Item
1	6Q17979	CASE CS–78.
2	6R9906	RULE: steel; 6″.
3	4T2215	GAGE: tape.
4	4T96368	GAGE: set of assembly; wire; 0.006″ to 0.025″.
5	4T106163	GAGE: set of cylindrical; wire; 0.030″ to 0.060″.
6	4T96395	GAGE: set of assembly; wire; 0.065″ to 0.080″.
7	4T96355	GAGE: set of assembly; flat; 0.002″ to 0.010″.
8	4T72581	PIN: gage.
9	4T73517	GAGE: perforation feed wheel.
10	4T73370	GAGE: armature locating.
11	4T95368	SCREWDRIVER: hex.
12	6R17260	SCREWDRIVER: 2″ blade; 5/32″ tip; 4¼″ over-all.
13	6R15121	SCREWDRIVER: 1½″ blade; 5/32″ tip; 5½″ over-all.
14	6R15310	SCREWDRIVER TL–21: 2½″ blade; 5/32″ tip; 6½″ over-all.
15	6R19005–1	SCREWDRIVER: screw-holding; 10″ blade; 5/32″ tip; 13⅝″ over-all.
16	6Q51014	HANDLE TL–14: file; wood; 4″ over-all.
17	6Q60229	KNIFE TL–29.
18	4T138–55	SCALE: 8 oz.
19	47138–58	SCALE: 32 oz.
20	4T4841	SCALE: 12 lb.
21	4T75765	HOOK; spring; pull.
22	4T75503	HOOK: spring; push.
23	4T77618	CASE: for small tools.
24	8A805	CHEESECLOTH: bleached; 36″ wd.
25	4C9914.5/51	TOOL ROLL: empty.
26	6M751	PAPER: cleaning; Bell seal bond.
27	6Z2000	CLOTH: emery; crocus; 9″ x 11″.
28	6Z7500–000	PAPER: sand, flint; No. 000; 9″ x 11″.
29	6Z2000–0	CLOTH: emery; No. 0; 9″ x 11″.
30	6M213	BRUSH: typewriter; toothbrush style.
31	6Z1567	BRUSH: sash tool; oval; No. 2.
32	6Z7360	ORANGE STICK: WECo No. KS–6320.
33	6Z7072	MIRROR: dental; WECo No. 376A; 6¾″ x ¼″ over-all.
34	4T6617	Tommy.
35	4T102876	STONE: contact.
36	4T138–30	FILE: contact.
37	4T88993	BURNISHER: contact.
38	4T72003	BENDER: spring.
39	4T72574	TOOL: locking bail; finger holding.
40	4T72575	TOOL: finger bending.
41	4T876698	STONE: carborundum.
42	6G184.1	CARBON TETRACHLORIDE: 8-oz metal can; technical grade.
43	6N7531	SOLDER M–31: resin core.
44	6N8583	TAPE TL–83: friction; cotton; ¾″ wd.
45	6N8692	TAPE TL–192: rubber; ¾″ wd.
46	6R4513	PLIERS TL–13: side-cutting; 6″.
47	6R4626	PLIERS TL–126: long-chain nose.
48	6R4735–6	PLIERS: duck bill; 6″.
49	6R4603	PLIERS TL–103: diagonal-cutting; 5″.
50	6R55006	WRENCH TL–111: adjustable single end; ¾″ capacity; 6″ lg.
51	4T87697	WRENCH: open; ½″–¾″.
52	4T4838	WRENCH: open; ⅜″–7/16″.
53	4T95366	WRENCH: open; ⅜″–9/16″.
54	4T74871	WRENCH: open; 0.385″.
55	4T95367	WRENCH: open; ¼″–5/16″.
56	4T138–36	WRENCH: open; 5/16″–¼″.
57	6Q50004	HAMMER: riveting; 4 oz.
58	6Q17979/C2	CASE: for tuning fork.
59	4T104984	TUNING FORK: 96.19 vps; Teletype No. 104984.
60	6Q17979/C2	CASE: for tuning fork.
61	4T103628	TUNING FORK: 87.6 vps; Teletype No. 103628.
62	6R24617	SOLDERING IRON: TL–117: 110-v, 70- to 100-w; with cord and plug.
63	4T138–23	WRENCH: socket; 5/16″.
64	4T138–22	SCREWDRIVER: hex.
65	4T89954	WRENCH: socket; ¼″.
66	4T89955	WRENCH: socket; 5/16″.
67	6Z7306	OILER: 6 oz; ⅛″ x 4¼″ spout; 1 drop force feed control.
68	6G800	GUN: grease; Teletype No. 88975.
69	6Z6970	MAGNET M–129: bar; steel; 6″ x 3/4″ x ¼″.
70	6Q38124–6	FILE: half-round; smooth; 6″.
71	6Q38033–6	FILE: flat; second cut; 6″.
72	6R57400–5	WRENCH: socket; Bristol; for No. 5 fluted setscrews.
73	6Z4002	FLASHLIGHT TL–122: includes bulb.
74	3F4470–236	TEST UNIT I–236: 5½″ x 3¾″ x 3¼″; includes neon lamp and target lamp.
75	6Z8626	TAPE: relay cleaning; ¼″ wd; WECo No. KS–6528.
76	6R16510	SCREWDRIVER TL–44: 8″ or 8½″ blade; ¼″ tip; insulated wood handle; 13″ or 13½″ over-all.

*This list was compiled on 15 May 1945 and is based on War Department Supply Catalog SIG 6–TE–50, April 1945.
**Reference numbers refer to figure 28

b. Materials. All materials listed below may be secured through regular supply channels.

Item	*Signal Corps stock No.*
Orange stick (WECo code No. KS–6320)	6Z7360
Cheesecloth, bleached 36″ wd	8A805
Cloth, emery; crocus, 9″ x 11″ sheets (spec No. 42C56–Navy)	6Z2000
Carbon tetrachloride	6G184.1
Oil, lubricating preservative, special, U. S. Army spec No. 2–120	6G1007
Grease, lubricating, special, Ordnance spec No. AXS–637	6G616
Paper, cleaning, Bell seal bond, ¼″ x 2½″ (WECo code No. KS–7188)	6M751
Paper, sand, flint, #0000 Fed. spec No. P–P–111	6Z7500–0000
Solvent, dry-cleaning, Fed. spec No. P–S–661a	6G1914
Polish, metal, paste	6G1516

Note. Gasoline will not be used as a cleaning fluid for any purpose. Dry-cleaning solvent (SD) is available as a cleaning fluid through established supply channels.

67. Preventive Maintenance for Exterior of Teletypewriter Set AN/TGC–1 (or AN/TGC–1A)

The following preventive maintenance procedures for the exterior of the teletypewriter sets are elementary operations which will be performed by the operator without detailed instructions.

a. INSPECT (I). Inspect the console for the following: dirt; cracked or chipped enamel; missing or broken screws, bolts, or nuts; bent, rusted, or otherwise damaged latches on doors, rollers, and sliding surfaces of shelves; broken, cracked, or otherwise damaged windows. Rotate the tape reels to see that they move freely.

b. TIGHTEN (T). Tighten all screws on the exterior of the cabinet; replace any that are missing. Tighten all switch mountings and knobs.

c. CLEAN (C). Wipe off oil, dirt, and excessive moisture with a clean, dry cloth.

d. LUBRICATE (L). Lubricate rollers and sliding surfaces of the shelves.

68. Cords, Cables, and Plugs

The following preventive maintenance procedures for cords, cables, and plugs are for all connections of this type used on the teletypewriter set. It includes all connections that may have been made at the factory, by the maintenance depot, or by the repairman.

a. INSPECT (I). Inspect cords and cables for cracked or deteriorated insulation, frayed or cut insulation at connecting points, and improper connections which strain the wires or connections. Inspect the plugs and sockets for dirt, rust, and corrosion and for cracked or damaged shells.

b. TIGHTEN (T). Remove the plug shells and sockets and tighten the connections. Tighten the connections on the power cords. Check to see that the connections on the terminal blocks are secure.

c. CLEAN (C). Wipe grease, oil, and moisture from the cords, plugs, and sockets with a clean, dry cloth. Clean any corrosion or stains from the plugs with polish, metal, paste (Sig C stock No. 6G1516) secured through regular supply channels. Do not apply an excessive amount of polish. Be sure to remove all residue of the polish after the cleaning operation in order not to interfere with electrical contact.

69. Fuses

a. INSPECT (I). Inspect the fuses and fuse holders for dirt, dust, and corrosion. Check for burned-out fuses.

b. CLEAN (C). Clean the fuses with a sash brush. Brush all dirt, dust, and foreign matter out of the fuse holders. If there is corrosion on the fuse or fuse holder, remove the corrosion with #0000 sandpaper or crocus cloth and wipe clean with a dry cloth.

70. Relays

a. GENERAL. Before applying preventive maintenance techniques to relays, determine whether a given relay is *normal* or *abnormal.*

(1) A relay is considered *normal* if—

(*a*) Exterior is free from dirt or dust.

(*b*) Contacts are not burned, pitted, or corroded, and do not have build-ups.

(*c*) Contact springs are in good condition.

(*d*) Moving parts travel freely and function satisfactorily.

(*e*) Connections to relay mountings are tight.

(*f*) Wire insulation is not frayed or torn.

(*g*) Relay assembly is securely mounted.

(*h*) Coil windings show no signs of overheating.

(*i*) Contacts are lined up and correctly spaced.

(2) A relay is considered *abnormal* if it fails to meet any of the nine requirements of a normal unit.

b. INSPECT (I).

(1) Inspect the relay to detect abnormalities, using the check list given in *a* above. If the contacts are not readily accessible, examine them with the aid of a flashlight and mirror. Many of the relays can be inspected and cleaned and have their contacts cleaned without being removed from their mountings or taken apart.

(2) Check the mechanical action of the relays to make certain that when the moving and stationary contracts come together they make positive contact and are directly in line with each other. The armature should move freely without

binding or dragging. Do not damage or misaline the relay mechanism.

(3) Relays which require the removal of the cover for complete inspection may be inclosed in glass, bakelite, or metal.

c. TIGHTEN (T). Tighten all loose connections and mounting screws friction-tight, but do not apply enough force to damage the screws or break the parts. If a screw does not turn easily, remove it and begin again.

d. CLEAN (C). Invert the relay cover and tap the closed end lightly to loosen dirt; then wipe the cover with a clean, dry, lintless cloth.

Note. Relays will be adjusted by qualified personnel only. Refer to paragraphs 156, 157, and 158 for method of adjustment.

71. Tape Winder

a. INSPECT (I). Inspect the tape-winder housing for excess dirt, cracked or chipped enamel, and missing or broken screws, bolts, or nuts.

b. TIGHTEN (T). Tighten all cover and mounting screws on the exterior of the tape-winder assembly; replace any screws that are missing.

c. CLEAN (C). Wipe off oil, dirt, and excessive moisture with a clean, dry cloth.

d. ADJUST (A). Adjust the tape winder as described in section XVII.

e. LUBRICATE (L). Lubrication instructions are contained in section X.

72. Tape-Winder Motor

a. INSPECT (I). Check for the following:

(1) Cracks and other damage to the motor.

(2) Loose, broken, or missing mounting screws.

(3) Overheating of the motor, by feeling it.

b. TIGHTEN (T). Tighten loose screws and bolts which are not part of an adjustment.

c. CLEAN (C). When cleaning the motor unit, do not remove the motor unit from the tape-winder housing unless absolutely necessary. Remove all oil, grease, and other foreign matter from the outer surfaces of the motor unit by wiping with a dry cloth.

d. LUBRICATE (L). Lubrication instructions are contained in section X.

73. Multiple Transmitter Distributor and Base

The multiple transmitter distributor and base are constructed so that all parts are easily accessible for maintenance. The preventive maintenance procedures for the small number of parts involved are listed below. All procedures of the same nature are grouped under one heading. For example, all items that require inspection are grouped under *inspect*; all items that require tightening are grouped under *tighten*; etc. Unless otherwise directed, perform all operations of the same type at the same time.

a. FEEL (F). Feel the motor for excessive heating as soon as possible after the teletypewriter set has been taken out of operation. Feel the amount of play in the bearings to judge whether they are showing signs of excessive wear. This can be done by grasping the motor governor and rotating or wiggling it with the hand.

b. INSPECT (I).

(1) Inspect the exterior of the unit for cracked or chipped enamel, for loose or missing screws, and for bent or broken parts. Inspect for accumulations of paper lint, dust, dirt, and other foreign matter.

(2) Check all levers, pawls, latches, and cams to determine that all parts move freely and are not bent, broken, or excessively worn.

(3) Inspect the transmitting shaft and its associated gear and clutch for dirt, corrosion, moisture, and excessive lubrication. Check the locking nuts, bushings, and cotter keys for looseness. Feel the motor as soon as possible after shut-down for signs of overheating. Check by sight for any sign that the shaft and gears are bent or out of line. Look over the gears for missing or broken teeth and excessive backlash.

(4) Inspect the tape-out contacts.

(5) Inspect the transmitting contact assembly for pitted or rough contacts.

(6) Inspect the surface of the motor for dirt, dust, and oil. Look for excessive lubrication. Inspect for loose, dirty, or corroded connections. Check to see that the motor is mounted securely in its proper place. Inspect the governor contacts, brushes, disks, and springs for damage, wear, and adjustment. Check the motor speed and note whether or not the governor holds its setting.

c. TIGHTEN (T). Tighten loose screws on the exterior of the unit. If the motor is mounted correctly, tighten all loose connections and motor mounting screws and bolts. Tighten only those loose parts which are not part of an adjustment.

d. CLEAN (C).

(1) Remove dirt, dust, paper lint, etc., from the exterior of the unit by wiping with a clean, dry cloth. Dampen the cloth slightly with water to remove excessive dust, mud, or other soluble matter. Dampen the cloth with solvent (SD) to remove oil, grease, or gummy deposits. Do not use an excessive amount of solvent (SD).

(2) Clean all mechanical parts with a clean, dry cloth. Fold the cloth over the blade of a screw driver to get into hard-to-reach places.

Caution: Be careful not to break or stretch any springs or wiring.

(3) To clean the transmitting contacts, fold a single thickness of clean cheesecloth over the end of the No. 4T88993 contact burnisher (part of Tool Equipment TE–50). Dip the cloth and burnisher in carbon tetrachloride and insert between the transmitting contacts (the contact levers should be on the high part of the cams). When the contacts are thoroughly dry, burnish with the contact burnisher until bright, applying a slight pressure with the finger against the contact springs to insure a polishing action. If build-ups are present on the contacts, remove the build-ups with a contact file before burnishing. Remove any filings and lint which may be present in the vicinity of the contacts.

(4) Wipe off all moisture, oil, grease, dust, and dirt from the exterior of the motor with a clean, dry cloth. Remove the carbon brushes from the motor and clean the brushes and the inside of the brush holders with a piece of cheesecloth moistened with carbon tetrachloride. Check the condition of the carbon brushes during this operation. Install new brushes when it is evident that the old brushes will not last until the next scheduled inspection.

Note. Scratch an identifying mark on the upper surface of each brush upon its removal to facilitate replacing the brush in the proper brush holder and in the proper position after cleaning.

e. ADJUST (A). Adjust the multiple transmitter distributor and motor unit in accordance with the specific instructions given in paragraphs 165 through 219.

f. LUBRICATE (L). Lubricate according to specific instructions given in section X. Avoid overlubrication as this will cause overheated bearings.

74. Capacitors and Resistors

Capacitors and resistors require replacement by an authorized repairman. However, there are several preventive maintenance procedures that can be performed by the operator. Before maintenance work is done, *short-circuit all high-voltage capacitors with a well-insulated screw driver.*

a. INSPECT (I). Inspect for loose or corroded connections, for cracked or damaged insulation, and for discoloration or bulging indicating excessive heating. Check all mountings. Do not attempt to move resistors with pigtail connections because there is danger of breaking the connections at the point where they enter the body of the resistor. Such defects cannot be repaired.

b. TIGHTEN (T). Tighten connections and mountings wherever they are loose. If a resistor is allowed to remain loose, vibration may break the connection or damage the body. Increase the tension of the clips by compressing them with the fingers.

c. CLEAN (C). Wipe off excessive moisture and clean oil or grease from the capacitors and resistors with a clean, dry cloth. If deposits of dirt are difficult to remove, moisten the cloth with solvent (SD). Keep large vitreous enameled resistors clean to avoid flash-overs or leakage between terminals. If metal-covered resistors are corroded, sand them lightly with a fine grade of sandpaper and then wipe them clean with a dry cloth. Resistors with discolored bodies cannot be cleaned. Discoloration is indicative of overloading at some time prior to inspection and is probably caused by circuit trouble, which requires analysis. Clean dirty or corroded connections with a cloth or brush dipped in solvent (SD). Loose soldered connections will be repaired by an experienced repairman.

75. Terminal Blocks

Terminal blocks, which are used as receiving, connecting, and distributing points for electrical circuits, consist of a strap of insulation with screw or solder connections.

a. Inspect (I). Inspect terminal blocks for loose connections and mounting screws, cracks, breaks, and dirt. Carefully examine the connections for mechanical defects, dirt, and corrosion.

b. Tighten (T). Tighten loose screws, bolts, and mounting lugs. Use a screw driver of the correct size, and be careful not to exert too much pressure. Remove and clean dirty or corroded connections before tightening.

c. Clean (C). Clean terminal blocks with a dry brush. Wipe off excessive moisture with a clean, dry cloth. When necessary, use a cloth moistened with solvent (SD), then wipe off the block thoroughly with a dry cloth and brush the block to remove all lint.

76. Wiring

a. Inspect (I). Inspect for cracked, frayed, or torn insulation. Check for loose connections, dirty contacts, and faulty lacing. Look for any wiring which may be bearing on rotating parts. Be sure that the ground connection is clean and tight. If the grounded point is open, it may interfere with the operation of the equipment.

b. Tighten (T). Tighten all screw connections which may be loose. Resolder loose or broken soldered connections. Place all wiring in the proper place and retie if necessary. Soldering will be done by an experienced repairman.

c. Clean (C). Clean all moisture, oil, and grease from the wiring with a clean, dry cloth. Clean all connections before reconnecting.

77. Rectifier

a. Inspect (I) Inspect the rectifier for dirt, dust, and gummy deposits. Examine the covers for proper fit. Check the functioning of the cover switch when the cover is removed and again when the cover is in place. Check fuses, cords, plugs, sockets, terminals, and leads on the tap-changing panels. Investigate any odor of burning insulation or excessive heating of parts.

Caution: When checking fuses, remove any strap, wire, or other device used to strap a blown fuse.

b. Tighten (T). Tighten any loose mounting screws and bolts, but do *not* tighten the drawbolt of a stack-type rectifier unit. Tighten the screws on the tap-changing panel. Solder any loose or broken connections. Bend the prongs on the power plugs to insure a tight fit in the sockets.

c. Clean (C).

(1) Remove dirt, dust, paper lint, etc., from the cover of the rectifier by wiping with a clean, dry cloth. If necessary, dampen the cloth slightly with water to remove excessive dust, mud, or other soluble matter. Be certain that no water enters the rectifier proper. Use solvent (SD) to remove oil, grease, or gummy deposits. Use solvent (SD) sparingly.

(2) Remove collections of paper lint, dust, dirt, or other foreign matter from between the rectifier disks. Use a small brush such as a camel's-hair touch-up brush about 1 inch wide. Be extremely careful when working the brush between any disks. Avoid this process unless it is absolutely necessary. Brush off any dirt, dust, or other foreign matter from all other parts with a stiff bristle brush. Be careful not to break any leads or connections. Wipe off excessive moisture with a clean, dry cloth.

d. Adjust (A). With the rectifier connected to its associated equipment, test for output voltage (par. 113). Before changing the leads on the tap-changing panel to provide the proper output voltage, check the a-c line voltage to be sure it is not temporarily higher or lower than normal.

78. Switches

All switches are of a common class and no specific instructions are provided for any particular switch.

a. Inspect (I). Inspect the mechanical action of each switch and look for signs of dirt and corrosion on all exposed parts. Examine the switches visually and observe the action by flipping the control knob or toggle or by pressing the switch button. Notice the amount of spring tension and freedom of movement. See if the contacts are clean and free from corrosion. Do not confuse brown or black stains on silver-plated contacts with corrosion. This stain is silver oxide and is a satisfactory conductor. Inspect for loose or dirty connections.

b. CLEAN (C). Wipe off all moisture with a clean, dry cloth. Clean the exterior surfaces of switches with a stiff brush moistened with solvent (SD) and polish with a dry cloth. Clean corroded contacts with No. 0000 sandpaper. Clean all switch contacts in the same manner as relay contacts. When the contacts have deep pits caused by burning or arcing, use a burnishing tool to resurface them.

c. ADJUST (A). Adjust the spring tension of the switch contacts with a suitable spring-bending tool. This will be done by an experienced mechanic .

79. Monitoring and Receiving Typing Reperforators

For preventive maintenance on typing reperforators, see TM 11–2223.

Section IX. PREVENTIVE MAINTENANCE CHECK LIST

80. Preventive Maintenance Check List

The following check list is a summary of the preventive maintenance to be performed on Teletypewriter Set AN/TGC–1 (or AN/TGC–1A). The time intervals shown on the check list (par. 81) may be reduced at any time by the local commander. For best performance of the equipment, however, the operations must be performed at least as frequently as called for in the check list. The echelon column indicates which operations are first echelon maintenance and which operations are second echelon maintenance. Operations are indicated by the letters of the word FITCAL. For example, if the letters ITA appear in the operations column, the item to be treated must be inspected (I), tightened (T), and adjusted (A).

81. Preventive Maintenance Check List for Teletypewriter Set AN/TGC–1 or AN/TGC–1A

Item No.	Operations	Item	When performed				Echelon
			Daily	Weekly	Monthly	Semi-annually	
1	ITCL	Exterior of teletypewriter set (par. 67)	X				1st
2	IC	Interior of console		X			1st
3	ITC	Cords, cables, and plugs (par. 68)		X			1st
4	IC	Fuses (par. 69)		X			1st
5	ITC	Relays (par. 70)		X			2d
6	FITCAL	Multiple transmitter distributor and base (par. 73)		X			2d
7	ITCAL	Tape-winder (par. 71)		X			2d
8	ITCL	Tape-winder motor (par. 72)			X		2d
9	ITC	Capacitors and resistors (par. 74)			X		2d
10	ITC	Terminal blocks (par. 75)			X		1st
11	ITC	Wiring (par. 76)			X		1st
12	ITCA	Rectifier (par. 77)			X		2d
13	ICA	Switches (par. 78)				X	2d
14		Typing and nontyping reperforators (see TM 11–2223)					

Note. X indicates when operations are to be performed.
F—Feel; I—Inspect; T—Tighten; C—Clean; A—Adjust; L—Lubricate.

Section X. LUBRICATION

82. Recommended Lubricants

The following table lists the lubricating material necessary in servicing Teletypewriter Set AN/TGC–1 or AN/TGC–1A:

Approved symbol	*Standard nomenclature*
GL	Grease, Lubricating, Special.
PS	*Oil, Lubricating, Preservative, Special.
OE 10	*Oil, Engine, SAE 10.

*When the temperature is so high that special preservative lubricating oil (PS) runs off the parts, engine oil, SAE 10 (OE 10), may be used in place of it.

83. Lubrication Schedules

Lubrication will be scheduled to allow for variations in wear resulting from differences in speeds of operation (368 or 600 o. p. m.), temperatures, and average hours of use per day.

a. Schedule When Operating at 368 O. P. M. (Average Temperatures). The recommended lubrication schedule for 368-o. p. m. operation under average temperature conditions is given in the following table:

Operation schedule	*Lubrication schedule*
Up to 8 hours per day	Every 30 days.
8 to 12 hours per day	Every 20 days.
12 to 16 hours per day	Every 15 days.
16 to 24 hours per day	Every 10 days.

b. Schedule When Operating at 600 O. P. M. (Average Temperatures). Reduce the interval between lubrications (*a* above) to approximately one-third when the equipment is operating at 600 o. p. m.

c. Schedule for Typing Reperforator Main Bail. The interval between lubrications of the main bail will be one-half as long as the interval between lubrications scheduled for the rest of the equipment (*a* and *b* above).

d. Schedule for Typing Reperforator Main Shaft. The interval between lubrications of the main shaft will be one-fourth as long as the interval between lubrications scheduled for the rest of the equipment (*a* and *b* above).

e. Schedule When Operating in Tropical or Desert Climates. Reduce the interval in the appropriate schedule (*a* through *d* above) by one-half when operating in tropical or desert climates.

Caution: When lubricating the equipment at frequent intervals, be extremely careful to avoid the accumulation of excessive oil.

84. Detailed Lubrication Instructions

a. General.

(1) Location of parts to be lubricated on the tape-winder unit, tape-winder motor, and console shelf is shown on figures 29 through 32. The type of lubricant to be used and specific instructions for lubricating each part are given in paragraph 88. Do not lubricate the equipment with the motor running.

Caution: Do not apply lubricants in excess of the quantities recommended. Wipe off excess oil.

(2) With a soft clean brush or a clean lint-free cloth lightly dampened with dry-cleaning solvent (SD) clean all parts to be lubricated. Wipe dry with a clean lint-free cloth before lubricating. After lubricating, wipe off excess lubricant with a clean lint-free cloth.

b. Methods of Applying Grease.

(1) *General.* When grease is specified, use special lubricating grease (GL). Pay particular attention to the information following the item in the lubrication charts indicating location, number of points, the amount or method of applying the lubricant, and any difference between initial and later lubrication. Grease both loops of all springs that exert a tension of 2½ pounds or more.

(2) *Filling grease gun.* Fill the grease gun furnished as part of Tool Equipment TE–50 in the following manner:

(*a*) Unscrew the lubricant tube from the cap casting.

(*b*) Place the open end of the lubricant tube over the opening in the filling washer in the can of proper lubricant. Press down on the lubricant tube until the tube is filled.

Note. If the cans of lubricant on hand are not equipped with filling washers, press the metal follower against the back end of the lubricant tube and fill the lubricant tube by using a clean wooden paddle or the fingers. Tamp the lubricant down solidly in the tube by pounding the closed end sharply against the palm of the hand. Continue to add lubricant and tamp until the tube is filled completely.

(*c*) Screw the lubricant tube back into the cap casting just enough to hold the tube in place. Insert a rod, screw driver, pencil, or similar object through the perforated end of the lubricant tube and press the metal follower into the tube to expel any air that may be trapped in the tube. When the lubricant begins to ooze past the threads, tighten the lubricant tube securely into the cap casting.

(*d*) Operate the handle back and forth several times until lubricant is pumped from the nozzle. The grease gun then is ready for use. If the lubricant does not flow from the nozzle in a solid stream when the handle is operated, it is an indication that all the air has not been expelled from the lubricant tube. Invert the gun and pound the cap casting end against the palm of the hand to jar the lubricant into the pump cylinder.

(3) *Greasing flat surfaces.* To grease flat surfaces, hold the nozzle of the grease gun against the surface, tilted at an angle of approximately 45°. Operate the handle until sufficient grease is ejected. If the surface is long, operate the handle slowly and at the same time move the nozzle of the gun along the surface to form a continuous ribbon of lubricant. The lubricant may be pumped out onto the fingers or the end of a screw driver for transfer into hard-to-reach places that cannot be reached directly with the grease gun.

c. Methods of Applying Oil.

(1) *General.* Unless grease is specified, apply 1 or 2 drops (or more when specifically indicated) of engine oil SAE 10 (OE 10) to the parts specified in the lubrication charts. Special preservative lubricating oil (PS) may be substituted for engine oil SAE 10 (OE 10) if engine oil SAE 10 is not available. Oil both loops of all springs that exert a tension of less than 2½ pounds.

(2) *Filling of oiler.* Fill the oiler furnished as part of Tool Equipment TE–50 as follows: Unscrew the top and remove the pump. Fill the tube with the proper lubricant and replace the pump. Tighten the top.

(3) *Use of oiler.* After filling the oiler or when starting to use the oiler after it has been standing for some time, operate the pump handle until oil is forced out of the nozzle and then adjust the stop beneath the pump handle for the desired flow of oil. Turn the adjusting stop in a counterclockwise direction to reduce the flow of oil and in a clockwise direction to increase the flow of oil.

Note. The adjustable stop beneath the pump handle may be moved to one side to make the stop inoperative.

(4) *Use of wire for applying oil.* A piece of No. 22 B. & S. gage wire dipped ½ inch into the oil and immediately touched to the point to be lubricated is an approved method of applying 1 or 2 drops of oil. The main advantage of this method is that it avoids overlubrication.

85. Preparation for Lubrication

a. General. Instructions for prelubrication disassembly and cleaning of the tape-winder unit, the Diehl-type tape-winder motor, the Barber-Colman type tape-winder motor, and the console shelf are given in *b* through *e* below. Instructions for prelubrication disassembly and cleaning procedures for the multiple transmitter distributor are given in paragraphs 86 and 87. Instructions for the prelubrication disassembly and cleaning procedures for the typing reperforators are given in TM 11–2223.

b. Tape-Winder Unit.

(1) Remove the two nuts and bolts that fasten the unit to the shelf and place the unit on the bench.

(2) Remove the tape reel.

(3) Remove the top cover plate of the 1-to-1 gear box (fig. 29) by unscrewing the four screws which secure it to the case.

(4) With a clean brush and solvent (SD), clean the gears, shafts, and bearings located inside the 1-to-1 gear box. Wipe off the grease droppings from the bottom of the gear box.

(5) With a clean cloth dampened in solvent (SD), wipe the tape-reel shaft end clean of grease.

(6) Lubricate the tape-winder unit as specified in paragraph 88*a* (fig. 29).

c. Tape-winder Motor.

(1) Remove the motor by unscrewing the four motor mounting screws, being careful not to put undue strain on the leads. To remove the motor leads, unscrew the cover on which the switch is located, unscrew the two screws which hold the terminal block in place inside the casing, and unsolder the motor leads which are connected on the back of the terminal.

(2) Remove the reducing-gear box (fig. 31) by unscrewing the three screws which fasten it to the motor case.

(3) Remove the brushes.

(4) Remove the two long screws that hold the motor casing together. These are located on the end opposite that on which the gear box is mounted and are located in the depressions in the case.

(5) Carefully remove the end of the motor to which the reducing-gear box was fastened. The armature then can be removed with the bearings in place on the shaft. Be careful not to lose the shims.

(6) Clean the coils and the inside of the case with a dry brush, cloth, or gentle air blast.

(7) Wipe the bearing housings in the ends of the case clean with a clean cloth slightly dampened with solvent (SD). Be careful not to damage the coils or to get any of the solvent (SD) on them.

(8) Clean the armature bearings with solvent (SD) and brush. Wrap a cloth or some protective covering around the armature coils and commutator to prevent the solvent (SD) from wetting them. If necessary, the bearings can be flushed clean by immersion in the solvent (SD), provided no part of the coils or commutator is immersed. Thoroughly dry the bearings with a clean cloth or gentle air blast.

(9) Clean the reducing-gear box gears, shafts, and bearings with a brush and solvent (SD). If necessary, flush by immersion in the solvent (SD). Dry thoroughly.

(10) Repack the armature bearings with special lubricating grease (GL). Wipe off all excess grease from the outside of the bearing. Lubricate the reducing-gear box gears, shafts, and bearings with special lubricating grease (GL).

(11) Reassemble the motor in the reverse order in which it was disassembled.

(12) Lubricate the tape-winder motor as specified in paragraph 88*b* (figs. 30 and 31).

Note. External plates of the reducing-gear case may be removed where necessary to facilitate lubrication of the reducing-gear shaft bearings.

d. Barber-Colman Tape-Winder Motor.

(1) Apply two drops of oil (OE 10) in each of the four holes on the top of the motor about every 30 days. The required amount of oil will depend upon the operating conditions. Increase or decrease the amount of oil as required. In extremely cold climates, use oil (PL-Special) instead of oil (OE 10).

(2) About every 6 months, clean and lubricate the gears in the gear reduction train assembly. To gain access to the gears, remove the four screws which hold one side of the gear train case. Clean the gears with a clean, dry, lint-free cloth dipped in solvent (SD). After the gears have been cleaned, lightly coat the teeth of the gears with grease (GL) and replace the side of the assembly case.

e. Console Shelf.

(1) No disassembly is required.

(2) Clean the inside of the console with a clean cloth, slightly dampened with solvent (SD), to remove dust and dirt and to wipe surfaces clean of oil or grease.

(3) Lubricate the console shelf as specified in paragraph 88*c* (fig. 32).

86. Preparation for Lubricating Multiple Transmitter Distributor

a. General. The location of the multiple transmitter distributor parts to be lubricated is shown in figures 33 through 35. The type of lubricant to be used and specific instructions for lubricating each part are given in paragraph 88*d*. Do not lubricate the equipment with the motor running. Do not apply lubricants in excess of the quantities recommended, and wipe off excess oil.

b. Disassembly.

(1) Disconnect power and line cords from the console and place the multiple transmitter distributor on a bench or other suitable place.

(2) Remove the card-holder bracket from the front of the unit by loosening the two knurled nuts.

(3) Remove the motor cover and the distributor cover and side plates by unscrewing the retaining screws. *Do not remove the screws that secure the top plates of the individual transmitter units.*

c. Cleaning and Lubricating.

(1) For more working room, the individual transmitter units may be removed from the base by removing the mounting screws that secure each to the base. Loosen the screws on the terminal strip and disconnect the transmitter distributor leads, taking note of their positions. Remove the two front screws and just loosen the rear one. Slide the transmitter distributor unit toward the front to clear the rear mounting screw.

(2) Remove the cam felt oil wick mounting bracket by unscrewing the mounting-bracket screw on the side of the unit.

(3) Disconnect the tape-out operating-lever spring and the selector-lever bail spring. Remove the two screws that fasten the contact bracket to the bottom plate. Access to these screws is from the under side of the bottom plate. Swing the contact bracket and assembly free, taking care not to put stress on the connecting wires.

(4) When further disassembly is required for routine cleaning of unit, remove the bottom plate. This can be accomplished by removing the top plate screw that secures the post to which the filter assembly is fastened. Disconnect the feed-pawl spring, release-bar spring, and the armature spring. Turn the unit bottom-side up and remove the screws which fasten the side frames to the bottom plate. Remove the screw that fastens the post to the bottom plate (do not remove the screw which fastens the post to which the filter is attached). Carefully ease top and bottom sections apart. All of the wiring will be located on the bottom section and most of the mechanical parts will be located on the top section.

(5) Further disassembly of individual parts now may be accomplished if desired. However, if care is used in the cleaning process further disassembly is not necessary. Be careful not to get any of the cleaning fluid on the magnet coils or the filter coils when cleaning the bottom section.

(6) To clean the bottom section, use a clean cloth, brush, and solvent (SD). Wipe off all accessible grease and oil with a cloth dampened in solvent (SD). Clean the places that are not accessible to the cloth by brushing and flushing (use care when flushing). Wipe dry with clean cloth.

(7) The top section may be cleaned by wiping accessible places on the section free of grease and oil. As there are no electrical parts or connections in the top section, a brush may be used freely, followed by flushing in clean solvent (SD). Thoroughly dry with a clean lint-free cloth.

(8) Reassemble the unit in the reverse order that it was disassembled. Check the adjustments (pars. 169 through 218).

(9) Lubricate the transmitter units as specified in paragraph 88*d* and figures 33 through 35.

87. Preparation for Lubricating Multiple Transmitter Distributor Base

a. Motor. Clean, adjust, and lubricate the motor unit as described in TM 11–2223.

b. Base.

(1) Use a cloth, brush, and solvent (SD) to clean the base and main-shaft gears and bearings. Remove the two felt wicks in the bearing oil holes and clean and rinse the wicks in the cleaning fluid; allow the wicks to dry and replace them in their holes.

(2) Lubricate the multiple transmitter distributor base as specified in paragraph 88*e*, figure 36.

88. Lubrication Charts for Teletypewriter Sets AN/TGC–1 and AN/TGC–1A

The following charts list the points to be lubricated on the tape-winder unit, the Diehl-type tape-winder motor, the console shelf, and multiple transmitter distributor. Lubrication information for Barber-Colman tape-winder motor is in paragraph 85*d*. Lubrication charts for the typing reperforator are contained in TM 11–2223. Item numbers are grouped by units and include all points to be lubricated on each unit. The item numbers are shown on referenced illustrations.

a. Tape-Winder Unit (fig. 29).

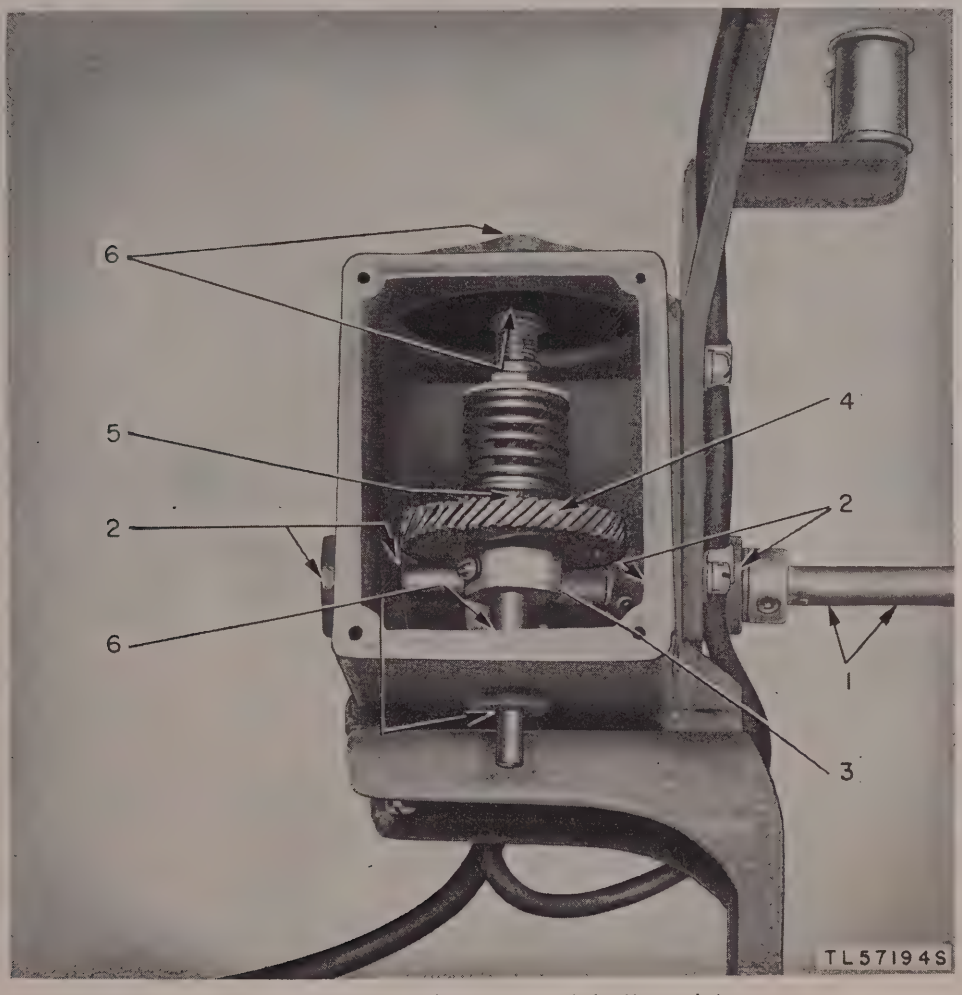

Figure 29. Tape-winder unit, lubrication points.

Item No.	Name of part	Lubricant	Method and quantity
1	Tape-reel latch and shaft	GL	Apply sparingly.
2	Tape-reel shaft bearings	PS	1 or 2 drops.
3	Tape-reel shaft gear	GL	Apply sparingly.
4	Clutch-shaft gear	GL	Apply sparingly.
5	Felt friction washer	PS	Saturate.
6	Clutch-shaft bearings	PS	1 or 2 drops.

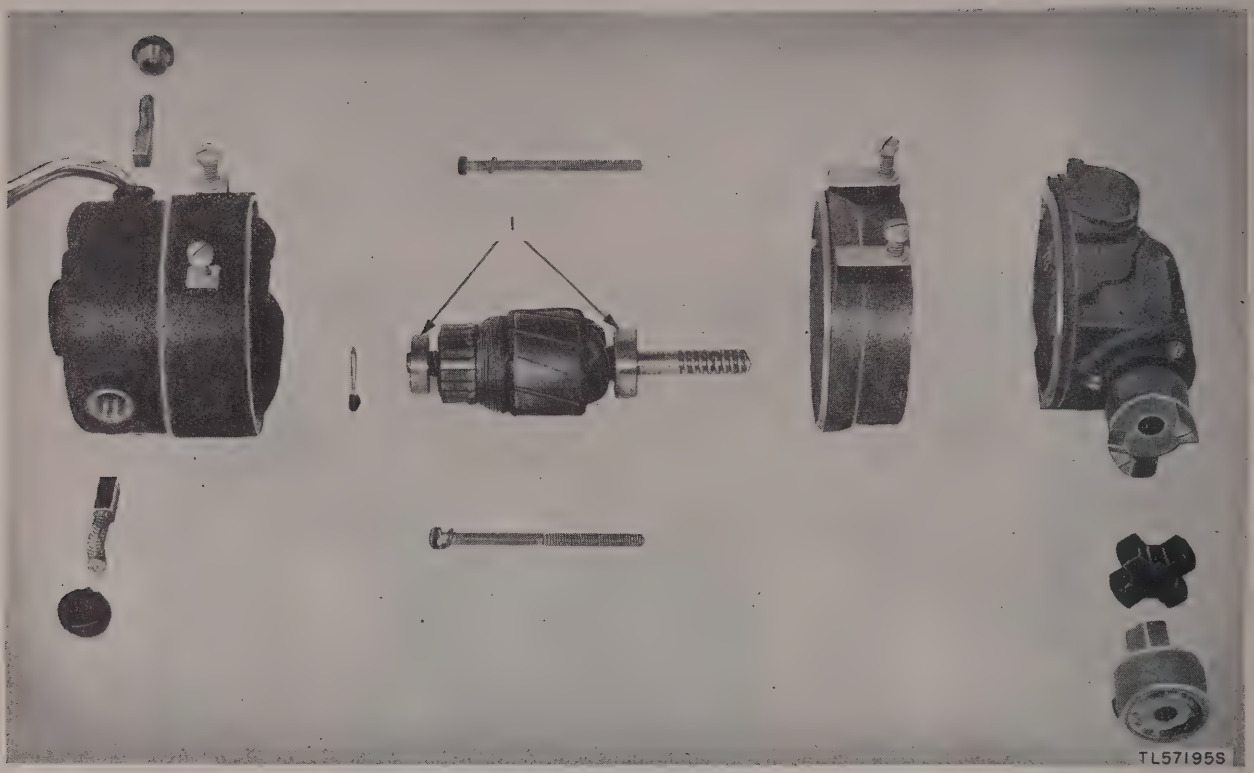

Figure 30. Tape-winder motor (split view), lubrication points.

b. Tape-Winder Motor, Diehl Type.

Item No.	Name of part	Lubricant	Method and quantity
1	Armature bearings	GL	Repack bearings; work grease into bearings and wipe off all surplus grease from outside of bearing case.
2	Reducing-gear box gears	GL	Work grease around gears; cover gear and pinion teeth liberally.
3	Reducing-gear box bearings	GL	Work grease into bearings.

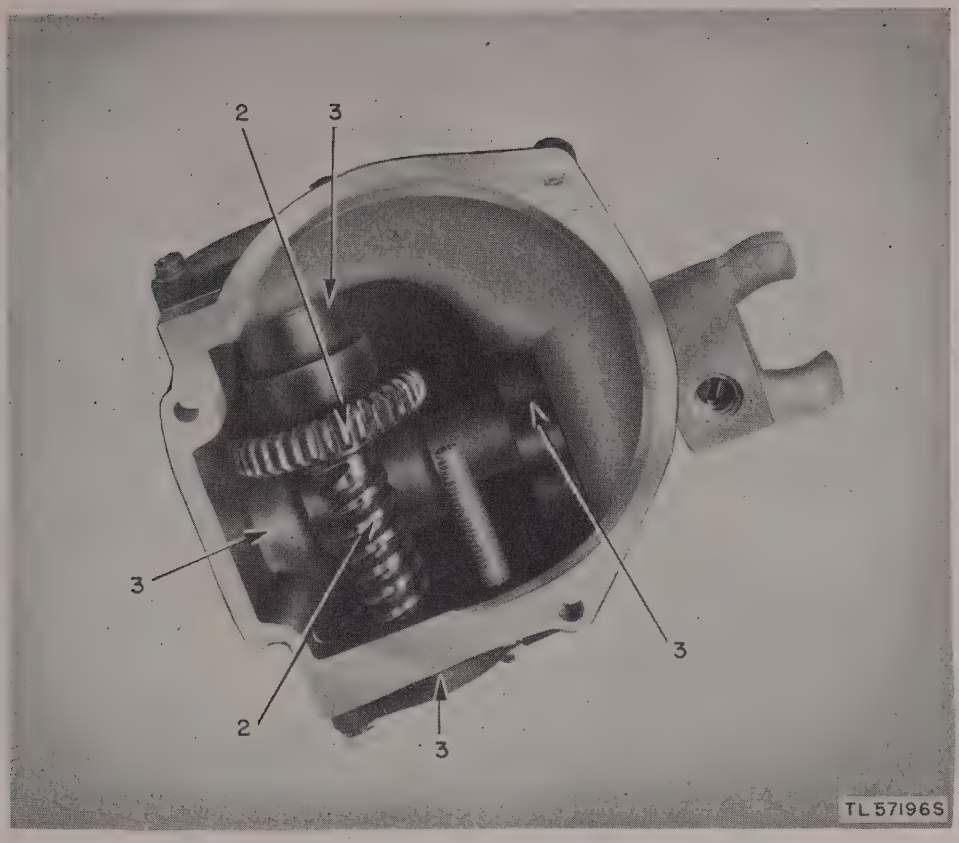

Figure 31. Reducing-gear box (internal view), lubrication points.

c. Console Shelf. On each of the three console shelves, lubricate the points listed in the following chart:

Item No.	Name of part	Lubricant	Method and quantity
1	Reperforator tape reel (oil hole)	PS	1 or 2 drops.
2	Shelf-roller shafts	PS	1 or 2 drops.
3	Shelf brackets	GL	Thin film.
4	Catch	PS	1 or 2 drops.

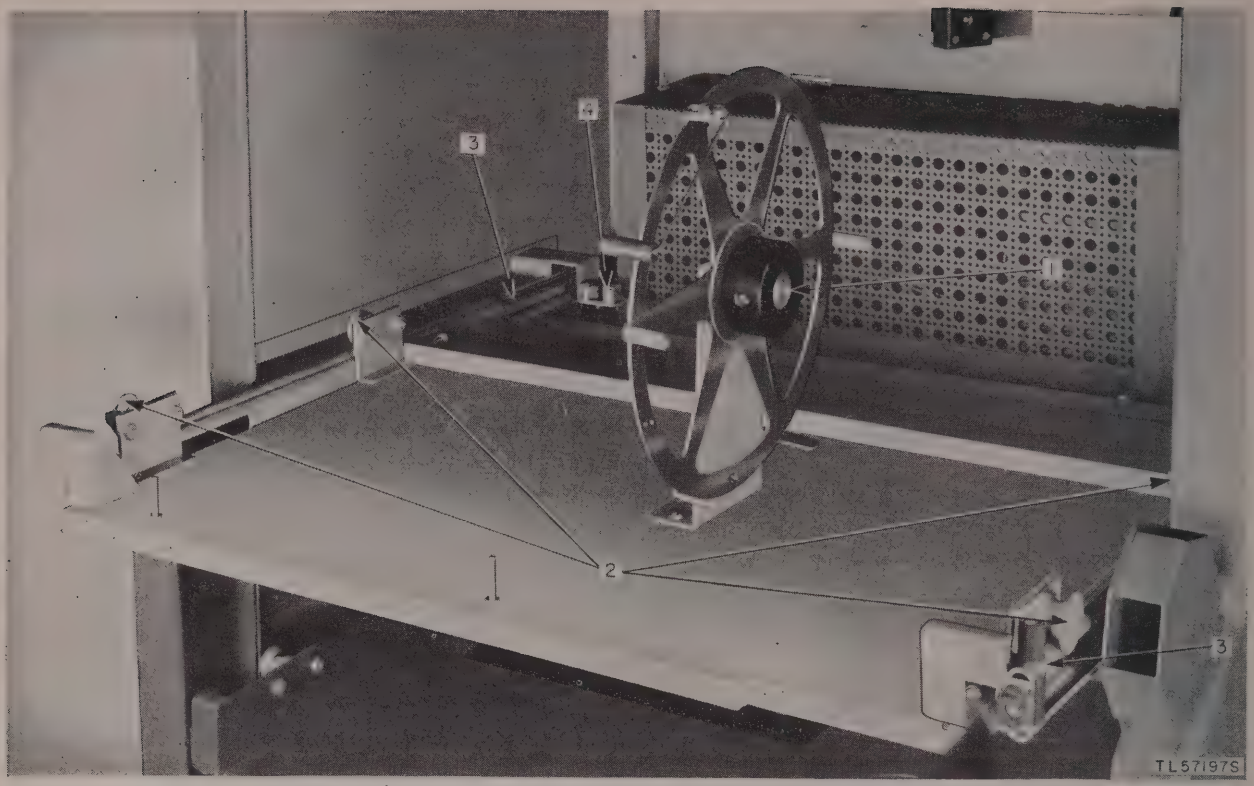

Figure 32. Console shelf, lubricating points.

d. Transmitter Unit (figs. 33 through 35). On each transmitter unit, lubricate the points listed in the following chart:

Item No.	Name of part	Lubricant	Method and quantity
1	Clutch (sliding member, shaft, slots, bearing surfaces)	GL	Apply sparingly.
2	Cam felt oiler	PS	Saturate.
3	Clutch throwout lever bearings	PS	1 or 2 drops.
4	Contact-lever pivoting shaft (pivot of each contact lever)	PS	1 or 2 drops.
5	Gear	GL	Apply sparingly.
6	Selector-lever pivoting shaft and guiding comb	PS	Apply sparingly.
7	Selector-lever guide	PS	Apply sparingly.
8	Feed-pawl lever roller bearing	PS	1 or 2 drops.
9	Selector-lever bail extension roller	PS	1 or 2 drops.
10	Feed-pawl bearing	PS	1 or 2 drops.
11	Feed-pawl ratchet	GL	Apply sparingly.
12	Feed-roll bearings	PS	1 or 2 drops.
13	Feed-wheel detent bearing	PS	1 or 2 drops.
14	Feed-wheel detent roller bearing	PS	1 or 2 drops.
15	Feed-wheel detent, point of contact with feed pawl	GL	Thin film.
16	Feed-wheel detent, point of contact with release bar	GL	Thin film.
17	Tape-out contact lever (guide slot in spring bar)	GL	Thin film.
18	Tape-out lever latch bearing	PS	1 or 2 drops.
19	Tape-out lever latch at point of contact with tape-out contact lever	GL	Thin film.
20	Release-bar bearing and guide	GL	Thin film.
21	Letters operating-lever bearing	PS	1 or 2 drops.
22	Selector-cam assembly shaft (two oil cups)	PS	Fill with oil after unit is mounted on base.

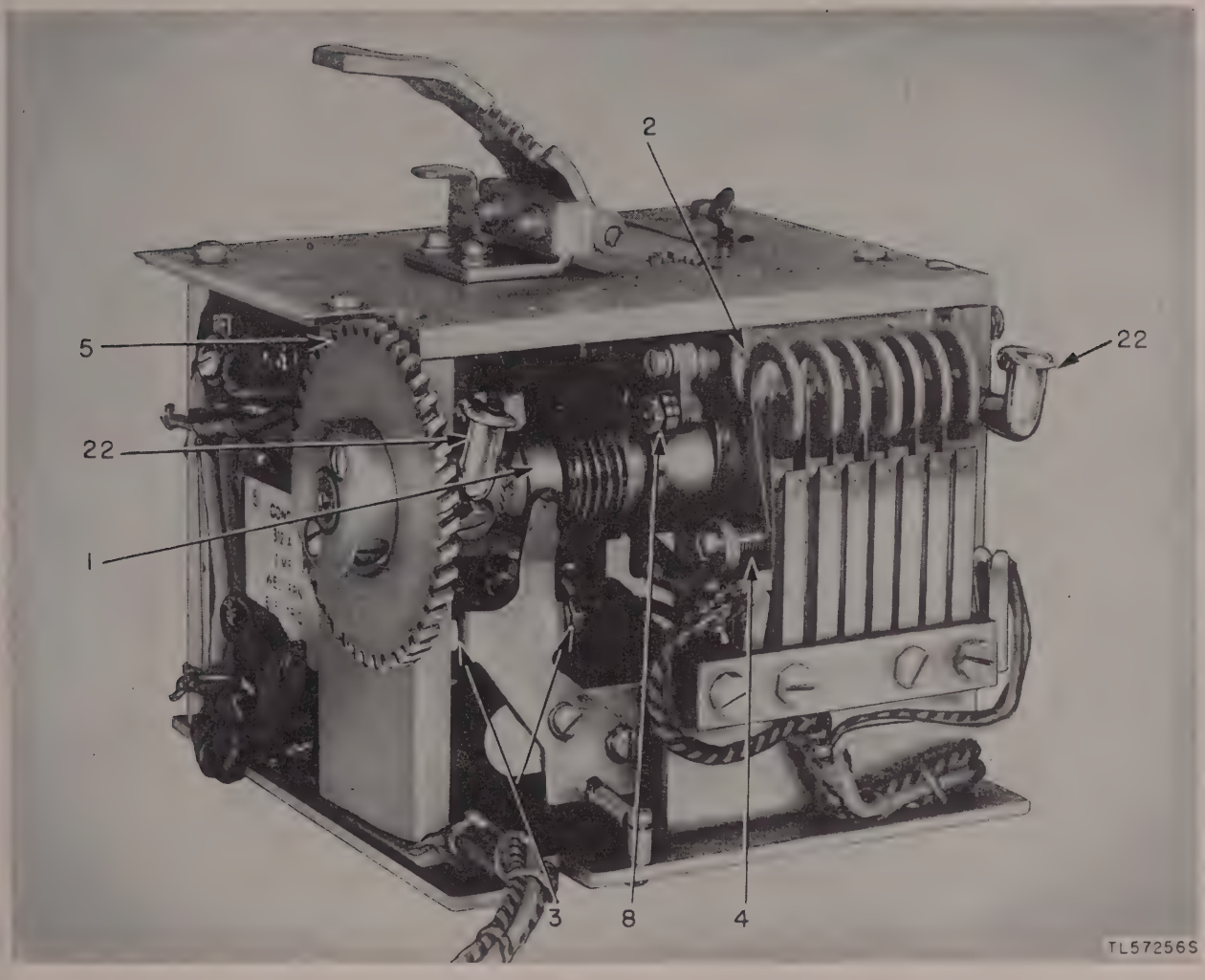

Figure 33. Individual transmitter distributor, lubrication points.

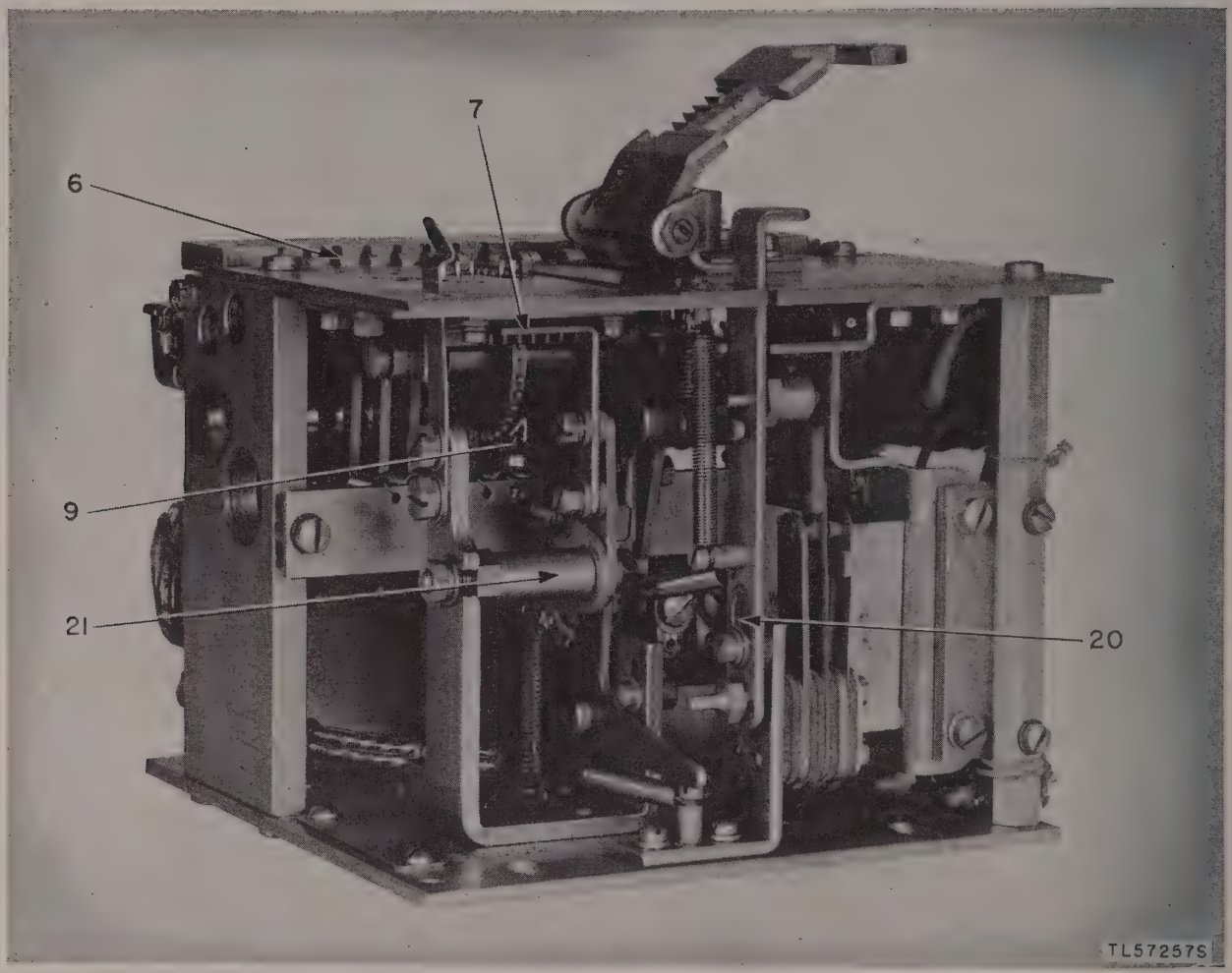

Figure 34. Individual transmitter distributor (number transmitter), lubrication points.

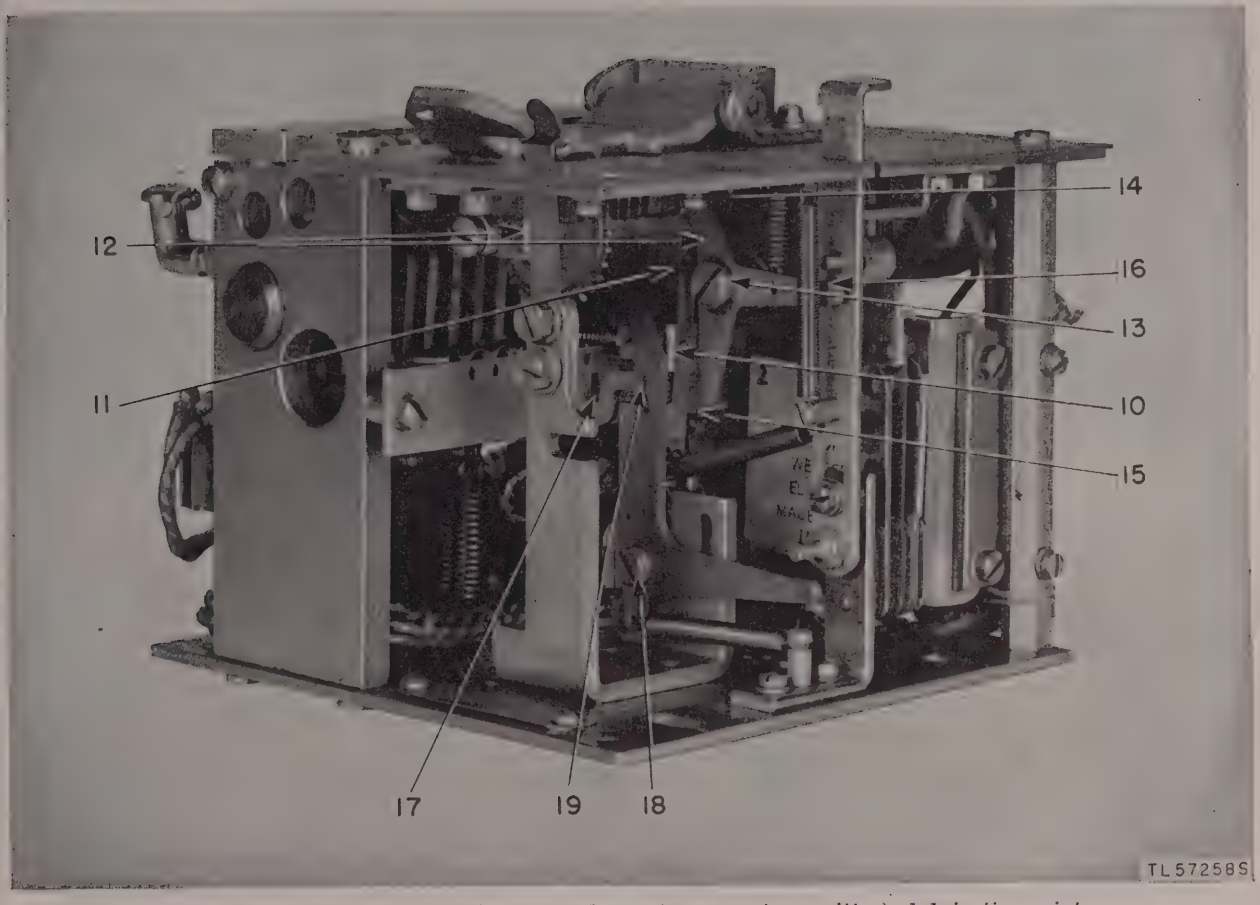

Figure 35. Individual transmitter distributor (message transmitter), lubrication points.

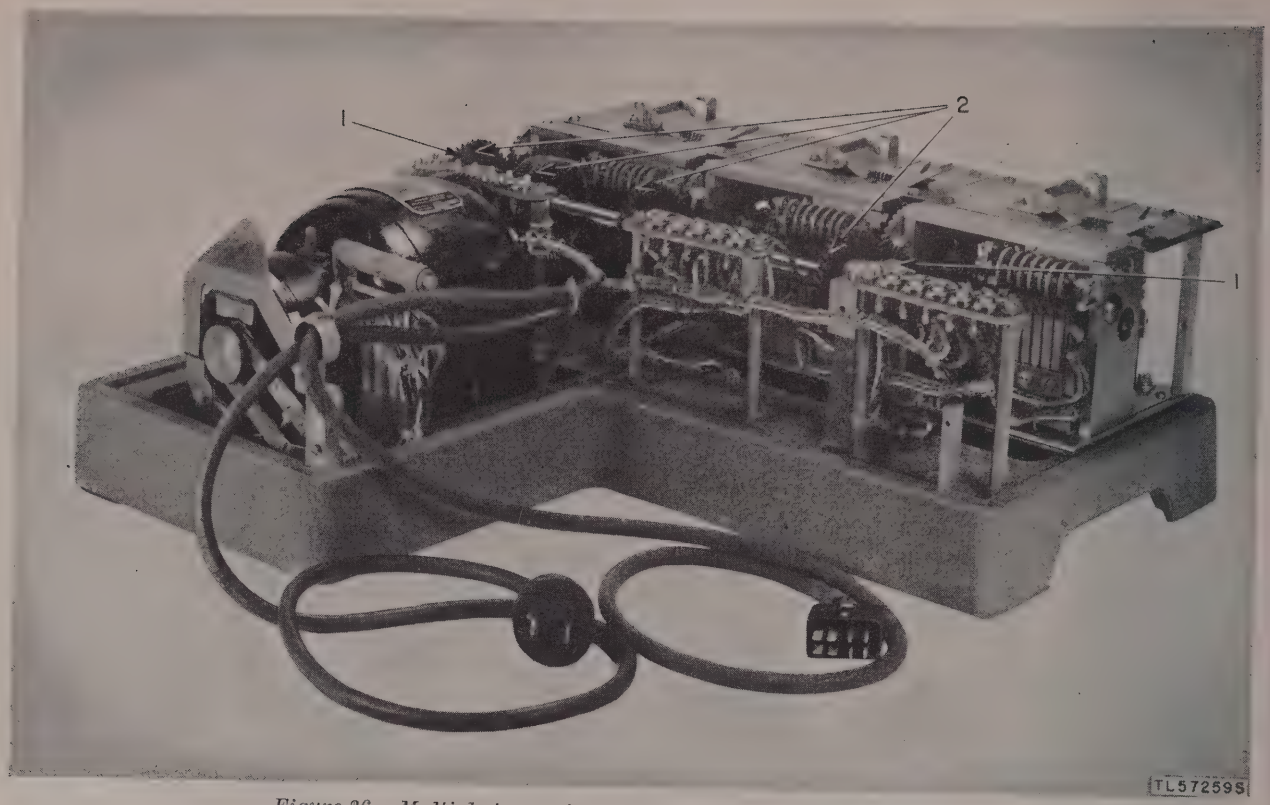

Figure 36. Multiple transmitter distributor base, lubrication points.

e. Multiple Transmitter Distributor Base (fig. 36).

Item No.	Name of part	Lubricant	Method and quantity
1	Main-shaft bearings (oil wicks)	PS	Saturate.
2	Main-shaft driven gear and driving gears	GL	Apply sparingly.

Section XI. WEATHERPROOFING OF EQUIPMENT

89. General

a. When equipment is operated in highly humid climates, excessive failure of parts and decreased operating efficiency usually are caused by the accumulated effects of moisture rather than by inferior parts. Rapid temperature changes accompanied by fog, rain, dew, or high humidity promote such failures.

b. The effects of moisture on resistors, capacitors, coils, chokes, transformer windings, terminal blocks, and insulating strips can be recognized in the form of corrosion, low insulation resistance, flash-overs, and cross-talk. Moisture also accelerates fungus growth which increases these effects.

90. Moistureproofing and Fungiproofing

a. A moistureproofing and fungiproofing treatment has been devised which, if properly applied, provides a reasonable degree of protection. The treatment consists of applying a film of moisture- and fungi-resistant varnish to all susceptible parts of the equipment. This film provides a nonwetting surface. Equipments which have been treated have been marked with the letters MFP and the date of treatment. Equipments not marked will be examined and, if treatment has been applied, the equipment will be returned to third or higher echelon maintenance units for treatment.

b. TB SIG 13 contains a detailed description of this treatment.

c. Re-treatment may be required after a period of use. Need for this re-treatment is indicated by excessive failures or by the effects listed in paragraph 89*b*.

Caution: Varnish spray may have poisonous effects if inhaled. To avoid inhaling spray, use respirator if available; otherwise, fasten cheesecloth or other cloth material over nose and mouth. Never spray varnish or lacquer near an open flame. Do not smoke in a room where varnish or lacquer is being sprayed. The spray may be highly explosive.

91. Moistureproofing and Fungiproofing Teletypewriter Sets AN/TGC–1 and AN/TGC–1A

a. Preparation. Make all repairs and adjustments necessary for proper operation of the equipment.

b. Disassembly. As the equipment is disassembled, immediately replace all removed screws and bolts in their respective holes to prevent loss of screws or clogging of threads during treatment.

(1) Disconnect the power cord (fig. 37 (12)). If more than one unit is being used, disconnect the power cord to the other unit (fig. 37 (11)).

(2) Remove all tape reels and tape from the equipment.

(3) Pull the equipment drawer out and disconnect all cables and connections. Remove the four WECo 255A polar relays. Polar relays are not to be treated.

(4) Remove the side panel of the power cabinet (fig. 37 (9)).

(5) Pull out the sliding shelf for the multiple transmitter distributor (fig. 37 (6)), disconnect the 8-pin plug and the power plug, and lift the multiple transmitter distributor from the shelf.

(6) Pull out the sliding shelf for the lower typing reperforator (fig. 37 (5)). Disconnect the motor and signal plugs (fig. 37 (3)) and lift the reperforator from the shelf.

(7) Disconnect the input and output plugs of the rectifier (fig. 37 (4)) and lift the rectifier from its shelf.

(8) Pull out the sliding shelf for the upper typing reperforator (fig. 37 (2)). Disconnect the motor and signal plugs and lift the reperforator from the shelf.

(9) Remove the two screws (fig. 37 (1)) that hold the signal indicator panel in place.

(10) Pull the signal indicator panel out and remove the 27-pin plug.

(11) Remove from the console all rubber-covered cables that are not permanently attached. These cables are not to be processed.

(12) Remove all screws holding the covers of the multiple transmitter distributor and take off the covers.

(13) On all cables of more than six wires on the equipment drawer, typing reperforators, and multiple transmitter distributor, cut the lacing and separate the wires to obtain sufficient penetration of varnish when applying with a brush.

(14) Remove the side panel of the equipment drawer (fig. 38 (4)) to facilitate spraying of wiring and component parts.

(15) Do *not* remove the relay cover in the equipment drawer (fig. 38 (1)) until the spraying process is completed. Work in the relay compartment is to be done with a brush.

(16) Remove the cover of the rectifier chassis.

c. Cleaning.

(1) Clean all dirt, dust, rust, and fungus from the equipment to be processed. Clean all oil and grease from the surfaces to be varnished.

(2) When the wiring is in good electrical condition but covered with an oil film too heavy to be removed, do not apply coating material to the wiring. If possible, replace the wiring.

(3) When wiring that is faulty or oil-soaked is replaced, treat the new wiring with coating material if the wire has not been treated with a fungicidal lacquer during manufacture.

Caution: Unless cleaning is done very carefully and thoroughly, the effectiveness of the moistureproofing and fungiproofing operation will be impaired.

d. Masking.

(1) Mask all rubber-covered cables that cannot be removed from the console.

(2) Be sure that the screws on the terminal strips (fig. 37 (14)) are tight.

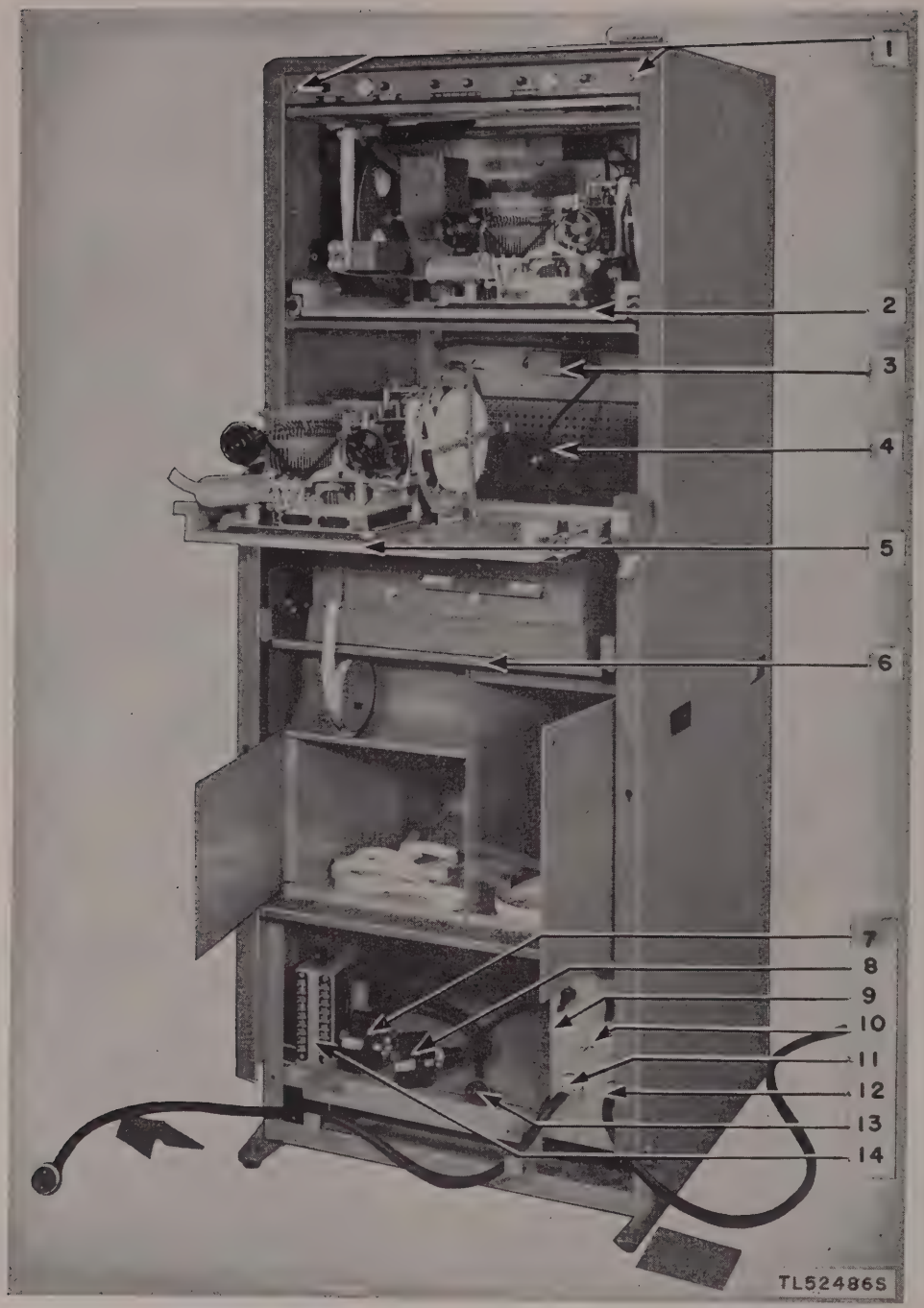

Figure 37. Teletypewriter Sets AN/TGC–1 and AN/TGC–1A, partially disassembled.

(3) Mask the ball joint of the main power switch (fig. 37 (10)) on the front of the power cabinet.

(4) Mask the two cord receptacles (fig. 37 (11) and (12)).

(5) Mask the pin sockets of the Jones plugs (fig. 37 (7) and (8)).

(6) Mask the pin socket of the plug (fig. 37 (13)).

(7) Mask the terminal strips (fig. 38 (5)) and the fuse block (fig. 38 (6)) in the equipment drawer.

(8) Mask all openings in the chassis around the relay soldering lugs in the equipment drawer (fig. 38 (2)).

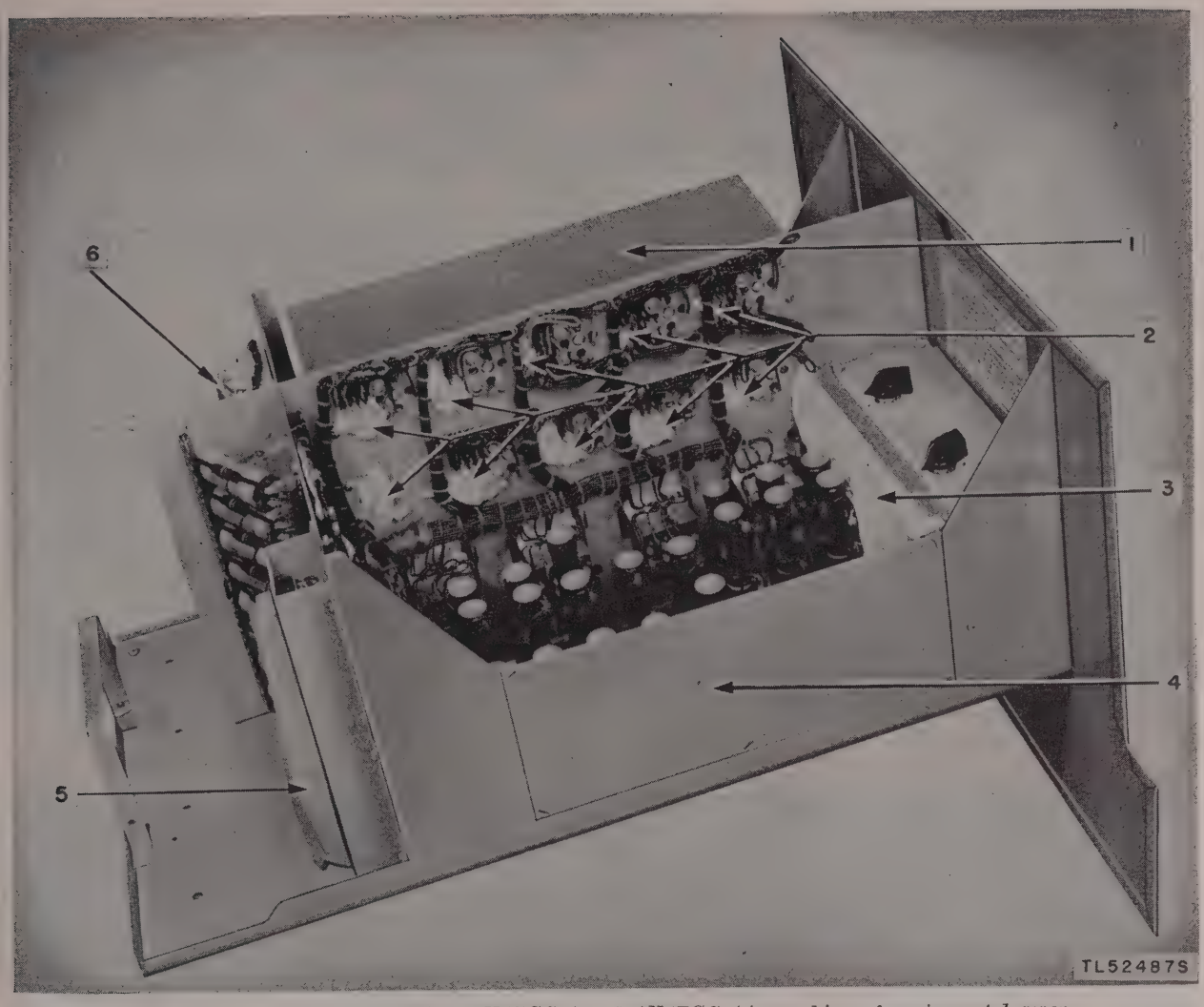

Figure 38. Teletypewriter Sets AN/TGC–1 and AN/TGC–1A, masking of equipment drawer.

(9) Mask the opening under the control panel in the equipment drawer (fig. 38 (3)).

(10) Mask the input and output of the rectifier cables (fig. 39 (2)) and their contacts.

(11) Mask the entire selenium stack in the rectifier (fig. 39 (1)).

(12) Mask the rubber covering of the power cable attached to the signal indicator (fig. 40 (1)).

(13) Mask the contacts of the Jones plug attached to the signal indicator (fig. 40 (2)).

(14) Mask the contacts of the six switches on the signal indicator (fig. 40 (3)).

Note. No masking is required for the typing reperforators and the multiple transmitter distributor. These components are to be treated with a brush.

e. Drying.

(1) Place the component parts of the equipment in an oven and bake for 2 to 4 hours at 140° F.

(2) Place strip heaters or heat lamps inside the console and bake for 2 to 4 hours at 140° F. If strip heaters are used, cover the entire front opening of the console.

Caution: Do not exceed 150° F. If insulating compound in any of the component parts begins to soften, decrease the temperature and increase the drying time approximately 1 hour for each 10° F. decrease in temperature.

f. Varnishing.

(1) Quickly inspect all masking to make sure it has not become loose during the drying process.

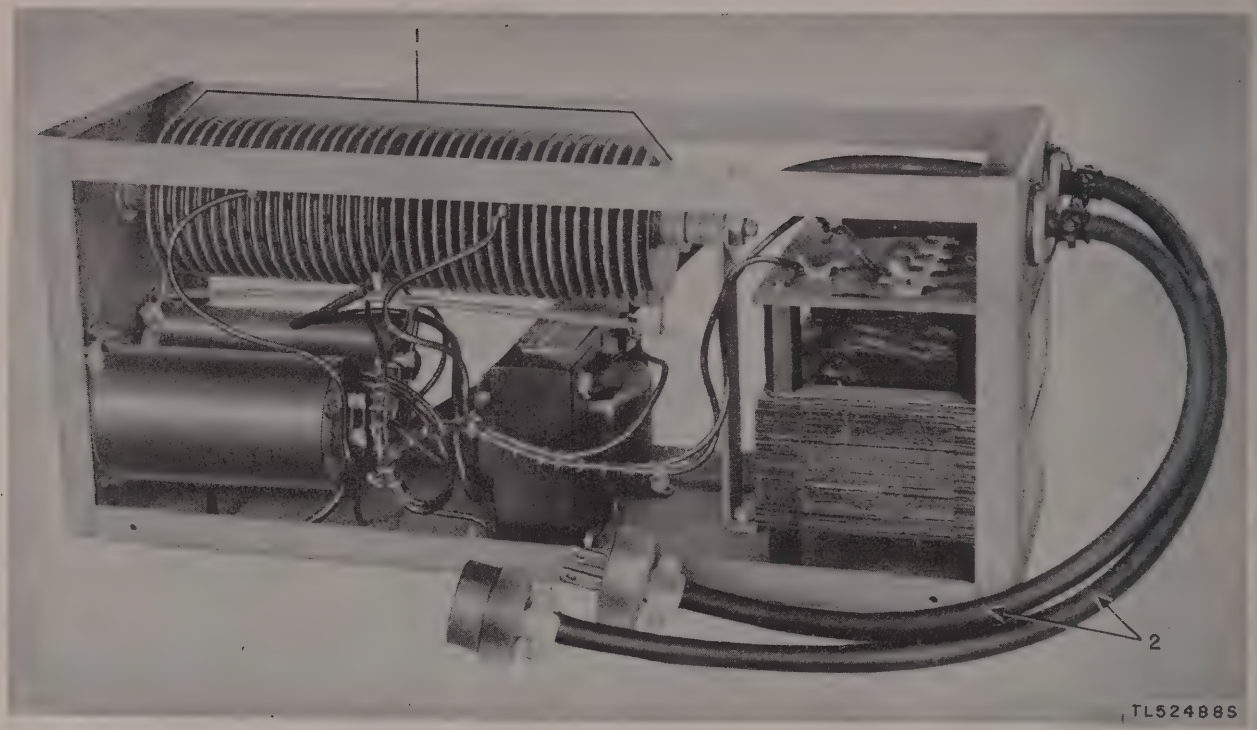

Figure 39. Teletypewriter Sets AN/TGC–1 and AN/TGC–1A, rectifier with cover removed.

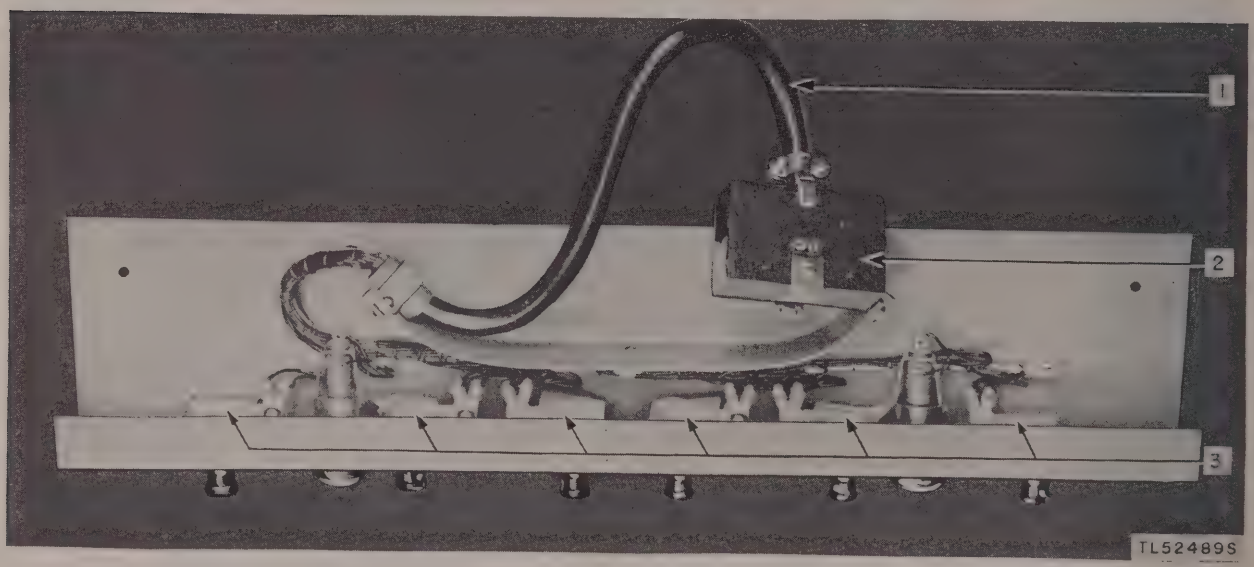

Figure 40. Teletypewriter Sets AN/TGC–1 and AN/TGC–1A, masking of signal indicator.

(2) Spray three coats of moistureproofing and fungiproofing varnish (Lacquer, Fungus-resistant, spec. No. 71–2202 (stock No. 6G1005.3), or equal) on all components and parts that are masked. Allow each coat to air-dry for 15 or 20 minutes before applying the next coat.

(3) With a brush, apply two coats of moistureproofing and fungiproofing varnish to soldered connections, conductors, and connections inside the plug body, terminal blocks, resistors, coils, capacitors, and wiring of the typing reperforators.

(4) With a brush, apply two coats of mois-

tureproofing and fungiproofing varnish to soldered connections, coils, capacitors, wiring resistors, terminal blocks, spring pile-ups, connections and wiring on the inside of the plug body, and to the terminal end of the cord of the multiple transmitter distributor.

Caution: Do not allow coating material to get on electrical contacts, slip connections, magnet pole faces, armatures, or mechanisms of the typing reperforators or multiple transmitter distributor.

(5) Apply varnish immediately after the equipment is dried. If varnish is not applied immediately, moisture condenses on the equipment. Varnish applied over the moisture peels off readily after the varnish has dried.

(6) After the spraying process has been completed and the varnish has dried, apply one coat of varnish with a brush to all cabled wires.

(7) With a brush, apply two coats of varnish to all wires except rubber-covered wires. Remove the relay cover (fig. 38 (1)) and apply two brush coats of varnish to all wiring and relay coils.

Be careful not to get varnish on any moving parts or contact surfaces.

(8) Do not varnish the front of the signal indicator.

g. Reassembly.

(1) Remove all masking tape, being careful not to peel varnish from nearby areas.

(2) After the varnish is thoroughly dry, reassemble the equipment by following the instructions for disassembly, in reverse order.

(3) Make a complete operational check of the equipment to be sure it is in good operating condition.

(4) If the unit does not operate after reassembly, check the electrical connections for presence of varnish coating. Varnish coating on terminals and electrical contacts acts as an insulating material. Recheck the reassembly operation. Component parts may have been replaced improperly or power leads connected to the wrong terminals.

Note. The electrical characteristics of electronic equipment are subject to change over a period of approximately 10 days after the application of the varnish. Wait until this period has elapsed before making the final check.

h. Marking. Mark the letters MFP and the date of treatment near the nameplate on the top of the equipment.

Example: MFP—24 July 46.

92. Moistureproofing and Fungiproofing After Repairs

If, during repair, the coating of protective varnish has been punctured or broken, and if complete treatment is not needed to reseal the equipment, apply a brush coat to the affected part. Be sure the break is completely sealed.

PART FOUR
AUXILIARY EQUIPMENT

(Not used)

PART FIVE
REPAIR INSTRUCTIONS

Section XII. GENERAL REPAIR PROCEDURE

93. Outline of Repair and Adjustment Procedure

Service failures can be kept to a minimum by careful handling of equipment during installation, by completing preventive maintenance as specified in part three, and by thoroughly investigating and correcting all troubles which are encountered. When service faults are discovered, a definite plan of corrective maintenance procedure will reduce both the time the equipment is inoperative and the amount of work required to complete the repairs. For assistance in locating and correcting defects in various parts and circuits, an outline of the information furnished in part five follows:

a. Detailed Functioning of Equipment. Section XIII includes a complete explanation of the purpose and operation of the various components and circuits. An understanding of how the various mechanisms function will assist greatly in determining when the equipment is operating correctly and when it requires repairs and, when repairs are required, whether it will be more practical to replace the part or to make the repair.

b. Tools and Test Equipment. Sections VIII and XIV describe the tools and test equipment normally required to accurately check all of the clearances, spring tensions, speeds of rotation, and other adjustments to determine that the entire teletypewriter set is functioning properly.

c. Trouble Locating. Section XV describes methods of isolating and locating different troubles and provides step-by-step analysis procedures in the form of trouble-analysis charts.

d. Repair and Replacement. Section XVI furnishes recommended procedures for the repair and replacement of those parts and units which experience the most wear.

e. Requirements and Adjustments. Section XVII gives the test requirements and adjustment values required to make a complete check and adjustment of the entire teletypewriter set.

94. Unsatisfactory Equipment Report

a. WD AGO Form 468 (Unsatisfactory Equipment Report) for Equipment Used by the Army. WD AGO Form 468 will be filled out and forwarded through channels to the Office of the Chief Signal Officer, Washington 25, D. C., when trouble occurs more often than is normal, as determined by qualified repair personnel.

b. AF Form 54 (Unsatisfactory Report) for Equipment Used by the Air Force. AF Form 54 will be filled out and forwarded to Commanding General, Air Matériel Command, Wright-Patterson Air Force Base, Dayton, Ohio, in accordance with AF Regulation 15–54, when trouble occurs more often than is normal, as determined by qualified repair personnel.

Section XIII. DETAILED FUNCTIONING OF EQUIPMENT

95. General

a. The detailed functioning of Teletypewriter Sets AN/TGC–1 and AN/TGC–1A may be followed by examining figures 41 through 60. These diagrams cover the theory of operation of the transmission and control circuits of the teletypewriter set. In the individual circuit diagrams used in this section, the heavy line indicates the circuit being described; relays are shown operated or nonoperated depending on their action in the circuit being described.

b. The separate numbered batteries in the individual circuit diagrams (figs. 41 through 60) represent the live pole of battery marked L in the schematic diagrams (figs. 127 through 132).

c. Switch SA is a five-section rotary switch, the sections of which are designated SA1, SA2, SA3, SA4, and SA5.

d. In the following paragraphs, for the sake of brevity, relay and switch contacts are described as follows:

(1) Contact 5 of relay RB is written RB–5.
(2) Contacts 7 and 8 of relay RBK2 is written RBK2–7/8.
(3) Contacts 11 and 12 of the third section of switch SA is written as SA3–11/12.

96. Sequence of Description of Transmitter Circuits

In the following paragraphs, the detailed functioning of the circuits of Teletypewriter Sets AN/TGC–1 and AN/TGC–1A is presented in a sequence which shows the follow-through from the moment a transmission cycle is started until it is completed. The transmission cycle is started when the transmitter start lever is depressed and released, setting up the pretransmission circuit which energizes relays RA and RB; this is described in paragraph 97. With these relays energized, the circuit is completed for energizing the number transmitter magnet. The number transmitter circuit is described in paragraph 98 which explains how, after the message number has been transmitted, the RN relay deenergizes the RNN relay to close the circuit, shorting out the high-resistance windings of relays RA and RB, to permit operation of the A and B transmitters. The message transmitter circuits and completion of the transmission cycle are described in paragraphs 99 and 100. Paragraphs 101 through 107 describe the functioning of the transmitting relays, break key, feed-out keys FO–1 and FO–2, relays RR1 and RR2, locking-out of typing reperforators, relay RC, and relays RBK1 and RBK2.

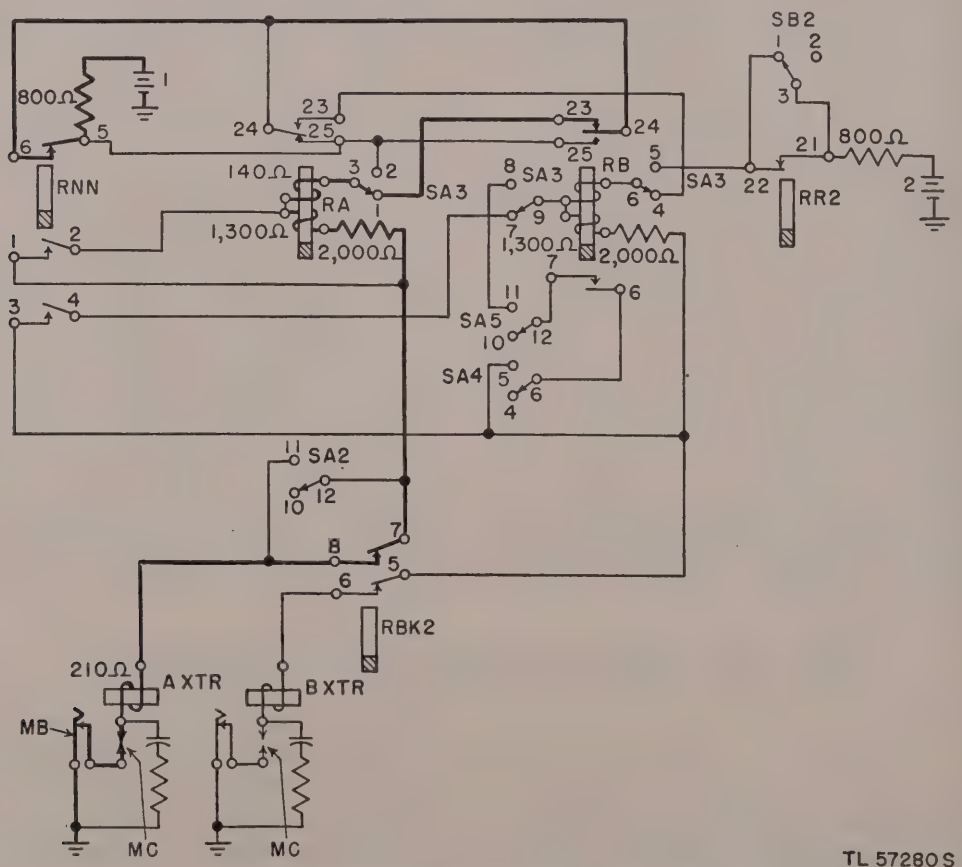

Figure 41. Pretransmission circuit, energization of RA relay, normal operation.

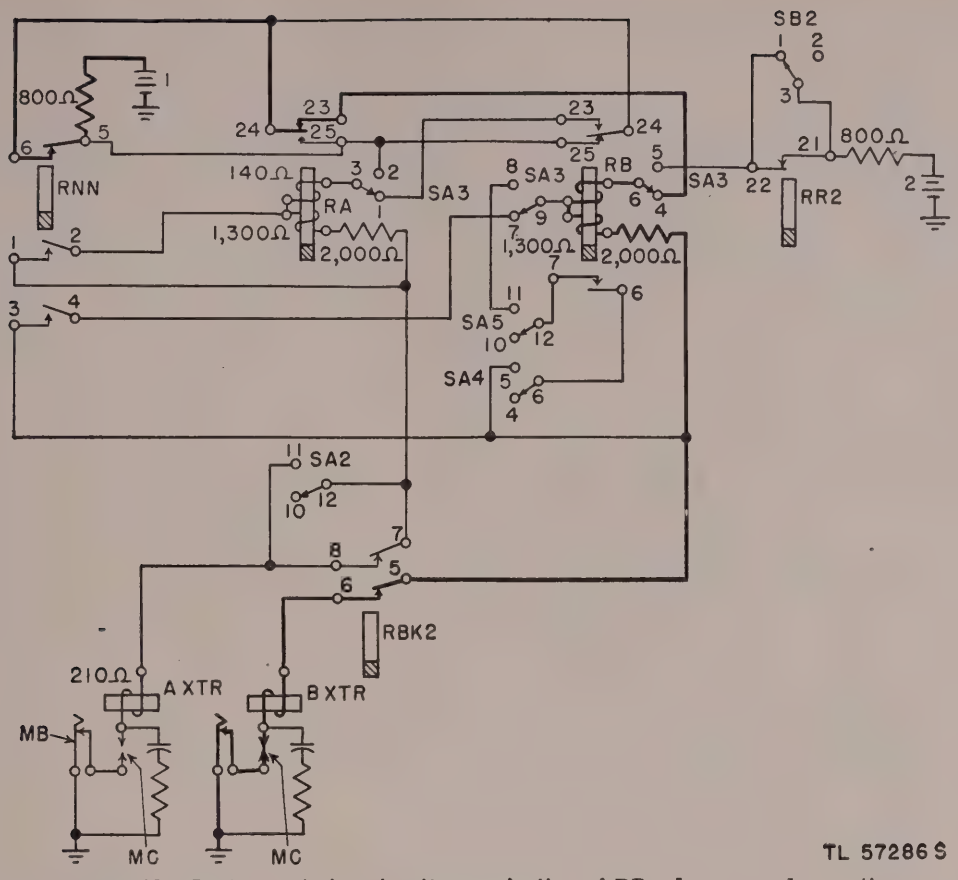

Figure 42. Pretransmission circuit, energization of RB relay, normal operation.

97. Transmitter Circuits (figs. 41, 42, and 43)

When transmitter start lever MB is depressed, a message tape is inserted in the A or B message transmitter unit, transmitter start lever MB is released, and tape-out contacts MC, in series with the A transmitter magnet, close mechanically.

a. Normal Operation (figs. 41 and 42). With switch SA in the NORMAL position, when transmitter start lever MB is depressed and released, tape-out contacts MC close mechanically, completing the circuit (heavy line, fig. 41) from battery 1 through relay RA and the A transmitter magnet, in series. The 1,300-ohm resistance in the lower winding of relay RA in series with a 2,000-ohm resistor limits the current in this circuit so that the current is great enough to operate relay RA but not great enough to operate the A transmitter magnet. The operation of RA disables, at contacts RA–24/23, the energizing circuit for relay RB. Therefore if a second tape is inserted in the B transmitter unit, no action takes place until after the release of RA which allows contacts RA–24/23 to close and the circuit for relay RB to be completed. The circuit for energizing relay RB is similar to that for energizing relay RA and is shown in heavy line in figure 42.

b. Split Operation (fig. 43). When switch SA is thrown to the SPLIT position, it connects the winding of relay RA directly to the 800-ohm battery tap resistance through SA3–2/3, and at the same time switches the winding of relay RB to a second 800-ohm battery tap resistance through SA3–5/6. Therefore RA and RB may be operated independently of each other.

c. Single Operation (fig. 43). When switch SB is thrown to the SINGLE position (changing SB2–1/3 to SB2–2/3), it removes the short across contacts RR2–22/21. Therefore, if switches SA and SB are in the SPLIT and SINGLE positions respectively, transmitter control relay RB cannot be energized while feed-out control relay RR2 remains operated. (In fig. 43, relay RR2 is shown in the nonoperated condition.)

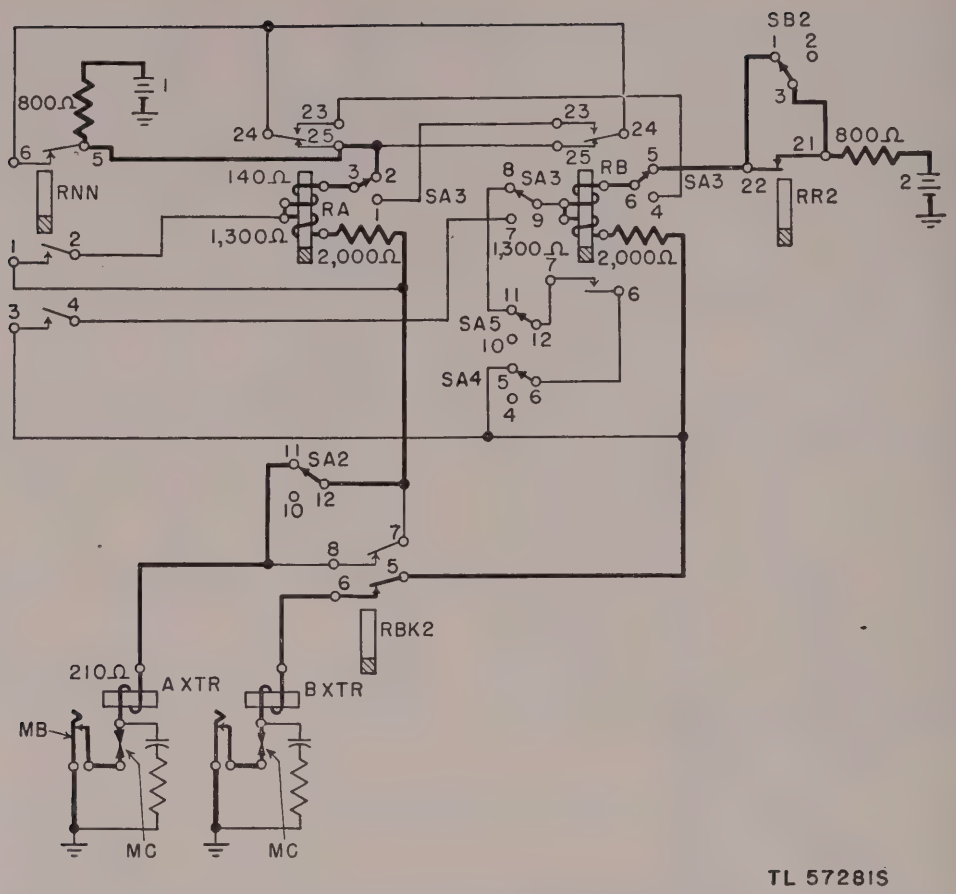

Figure 43. Pretransmission circuit, energization of RA and RB relays, split operation.

98. Number Transmitter Circuit (figs. 44 and 45)

The operation of relay RA or RB as described in paragraph 97 completes the circuit, through RA–6/7 or RB–6/7, for energizing the number transmitter magnet.

a. Normal Operation. Figure 44 shows the circuit for energizing the number transmitter magnet when switch SA is in the NORMAL position. (In figure 44 the circuit common to relays RA and RB is shown in heavy line, and relays RA and RB are shown in the nonoperated condition.) With relay RA operated, the circuit is from battery 2 through SB2–3/1, SA5–7/9, RA–6/7, through relay RN and the number transmitter magnet, in parallel, to ground. With relay RB operated, the circuit is from battery 2, through SB2–3/1, SA5–7/9, SA4–4/6, RB–6/7, SA5–10/12, through relay RN and the number transmitter magnet, in parallel, to ground. The resistances of the two branches are proportioned so that sufficient current flows to operate the number transmitter magnet but not sufficient to operate relay RN. The number transmitter magnet therefore operates and releases the transmitter clutch, sending out the next number. At the end of the number an unshift (letters) signal occurs, which is mechanically *sensed* causing momentary opening of contacts NC. The opening of contacts NC breaks the number transmitter magnet circuit and raises the current in the RN branch of the circuit to a value sufficient to operate relay RN. The operation of RN opens contacts RN–2/1 (and RN–3/4: see paragraph 99), preventing reenergization of the number transmitter magnet even though contacts NC again close. (Fig. 42 shows relay RN in the nonoperated condition.)

b. Split Operation (fig. 45). When switch SA is thrown to SPLIT, it removes contacts RB–6/7 (fig. 45) from the number transmitter circuit by changing contacts SA4–4/6 and SA5–10/12 to contacts SA4–5/6 and SA5–11/12; contacts RB–6/7 therefore no longer control the operation of the

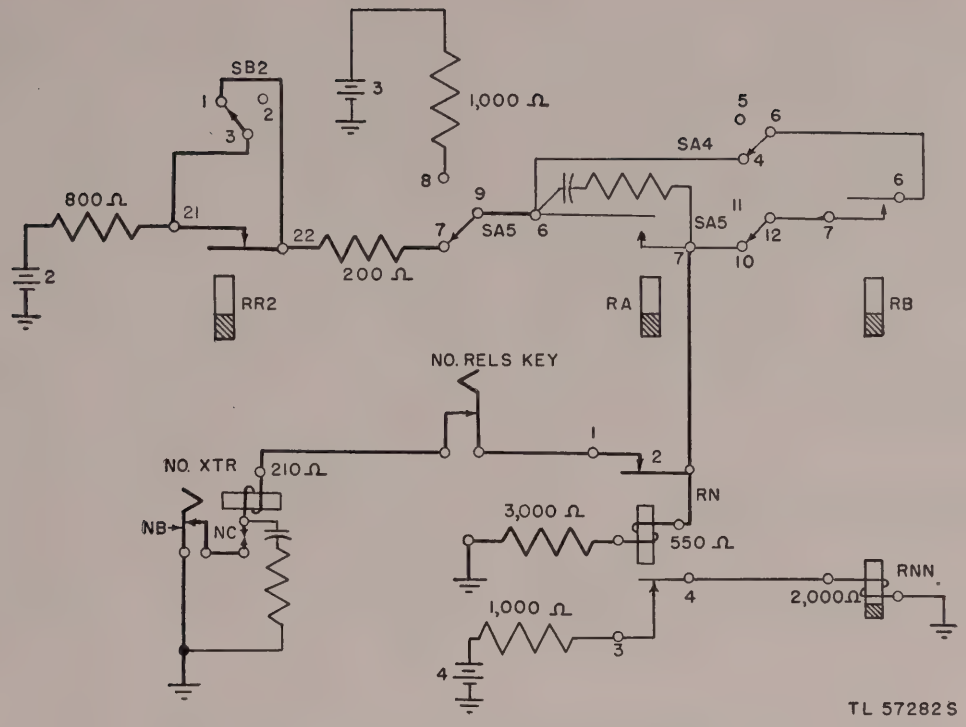

Figure 44. Number transmitter circuit, normal operation.

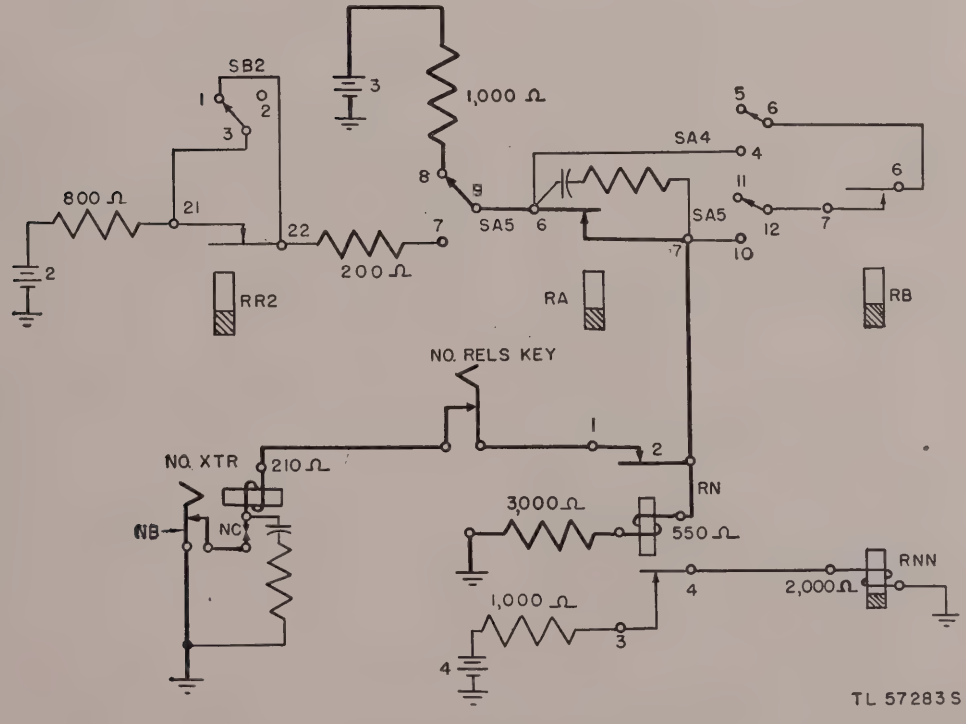

Figure 45. Number transmitter circuit, split operation.

number transmitter circuit. Switch SA also switches contact SA5–7/9 to contact SA5–8/9, which connects the energizing circuit for the number transmitter circuit directly to the 1,000-ohm battery tap resistance.

c. Single Operation (fig. 45). When switch SB is thrown to SINGLE (changing SB2–1/3 to SB2–2/3) the short across contacts RR2–22/21 is removed. If switches SA and SB are in the NORMAL and SINGLE positions, respectively, the number transmitter unit cannot be operated while feed-out control relay RR2 remains operated (par. 104). (In fig. 44, relay RR2 is shown in the nonoperated condition.)

99. Message Transmitter Circuits

Whenever relay RN is operated it releases relay RNN (fig. 45 at contacts RN–3/4). (Fig. 45 shows relay RNN in the operated condition.)

a. Normal Operation (figs. 46 and 47). With relay RA operated, the release of RNN shorts out (through RNN–1/2) the high-resistance (1,300 ohms) winding of relay RA together with the 2,000 ohms series resistor (heavy line, fig. 46). Shorting out 3,300-ohms resistance raises the current in the circuit to a value sufficient to operate the A transmitter magnet. The high current, through the low resistance winding of relay RA, is sufficient to hold RA in the operated position. The A transmitter magnet operates and releases the transmitter clutch, sending out the message. With relay RB operated, a similar circuit (heavy line, fig. 47) for the B transmitter magnet may be traced, contacts RNN–3/4 performing the operation of shorting out the high-resistance winding of relay RB.

b. Split Operation (heavy lines, fig. 48). When switch SA is thrown to the SPLIT position, contacts RNN–3/4 are not connected to the cir-

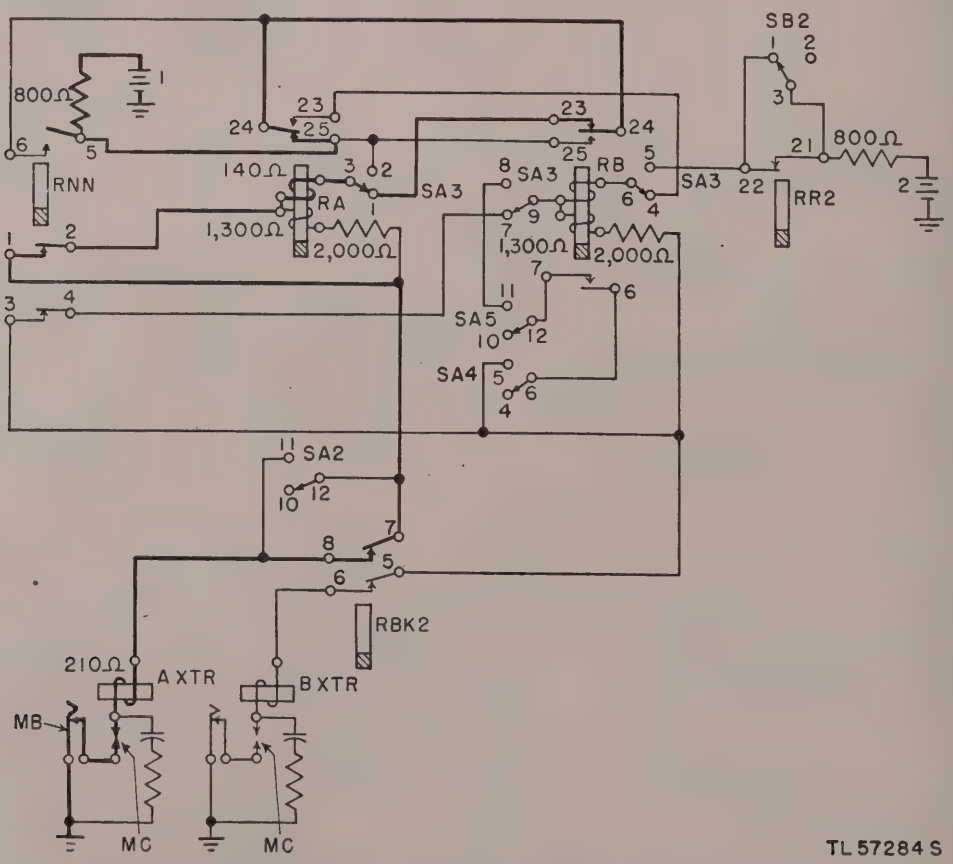

Figure 46. Message transmitter circuit (A transmitter), normal operation.

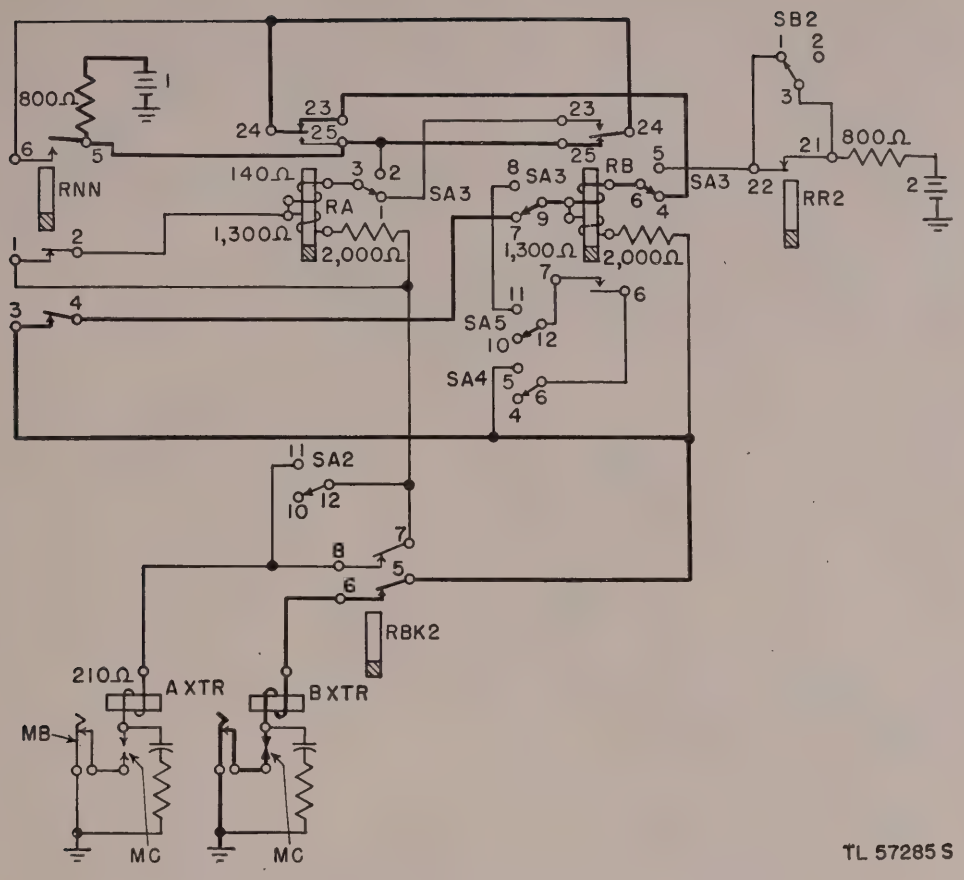

Figure 47. Message transmitter circuit (B transmitter), normal operation.

cuit of relay RB and contacts RB–6/7 perform the operation of shorting out the high-resistance winding of RB. Thus, as soon as relay RB is operated, it shorts out its own high-resistance winding and starts the B transmitter (circuit No. 2) independently of the operation of relay RNN (circuit No. 1).

100. Completion of Transmission Cycle

a. Normal Operation. At the end of the message, as the tape runs out, the tape-out sensing pin (par. 115*g*(1)) rises, causing contacts MC (fig. 41) to open. The opening of MC causes release of the A (or B) transmitter magnet and relay RA (or RB). The release of RA or RB breaks the energizing circuit to RN (fig. 44). The release of RN reenergizes RNN, restoring the teletypewriter set circuits to the pretransmission state of rest in readiness for transmission of the next message (fig. 41). If a second message is inserted in the idle transmitter, the reoperation of RN will immediately complete the transmitting circuit for the A or B transmitter magnet, commencing a new cycle of operation.

b. Split Operation. When switch SA is thrown to SPLIT, relay RB is no longer associated with relay RN (fig. 48). The release of RB therefore completes the operating cycle for circuit No. 2 and a new tape may be inserted in the B message transmitter unit.

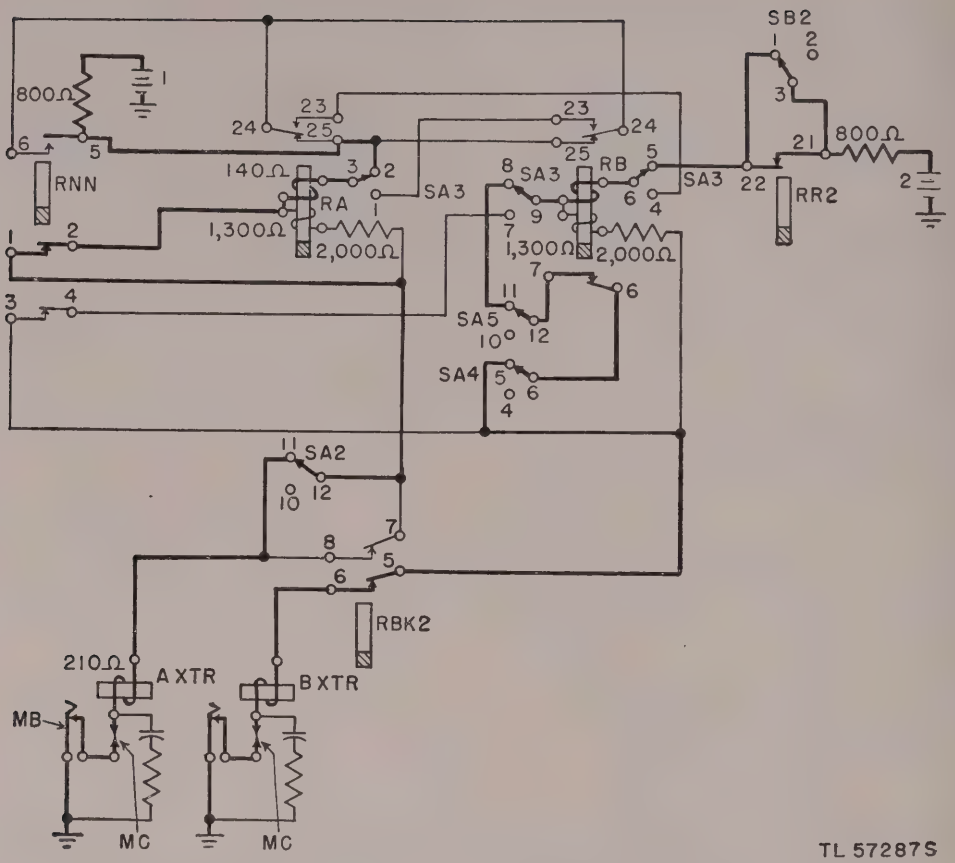

Figure 48. Message transmitter circuit, split operation.

101. Detailed Functioning of A and B Transmitting Relays (fig. 49)

The A and B transmitting relays have biasing windings, 2–7, through each of which flows a fixed current of such polarity as to move the relay tongues to their spacing contacts. The operating windings 3–6, of these relays are under control of the transmitting contacts of the transmitter units and when the transmitter contacts are closed are fed with current of such strength and polarity that the pull of the current in the bias windings is overcome and the relay tongues move to their marking contacts.

a. Normal Operation (fig. 49). With switch SA in the NORMAL position, all three transmitter units control the B transmitting relay. The circuit (heavy line, fig. 49) may be traced from positive battery through the 3–6 winding of the B transmitting relay, break key, monitor jack MJ–4, transmitting contacts of all three transmitter units in series, to negative battery. Operation of any one of the transmitter units, or of a spare transmitter or keyboard plugged into monitor jack MJ–3 or MJ–4, causes the B transmitting relay to operate and to repeat the signals to the line.

b. Split Operation (figs. 50 and 51). Throwing switch SA to SPLIT (heavy line, fig. 50) places the B transmitting relay under control of the B message transmitter unit and places the A transmitting relay under control of the transmitting contacts of the A message transmitter unit and the number transmitter unit.

(1) *Circuit No. 1.* Circuit No. 1 (heavy line, fig. 50) is from positive battery through winding 3–6 of the A transmitting relay, SA1–2/3, monitor jack MJ–3, transmitting contacts of the A message transmitter unit, and the number transmitter unit, to negative battery. The A transmitting relay will repeat signals from the A or number transmitter or from a spare transmitter or keyboard plugged into monitor jack MJ–3.

(2) *Circuit No. 2.* Circuit No. 2 (heavy line, fig. 51) is from positive battery, through

winding 3–6 of the B transmitting relay, break key, monitor jack MJ–4, transmitting contacts of the B message transmitter, SA1–6/5, to negative battery. The B transmitting relay will repeat signals from the B message transmitter unit or from a spare transmitter or keyboard plugged into monitor jack MJ–4.

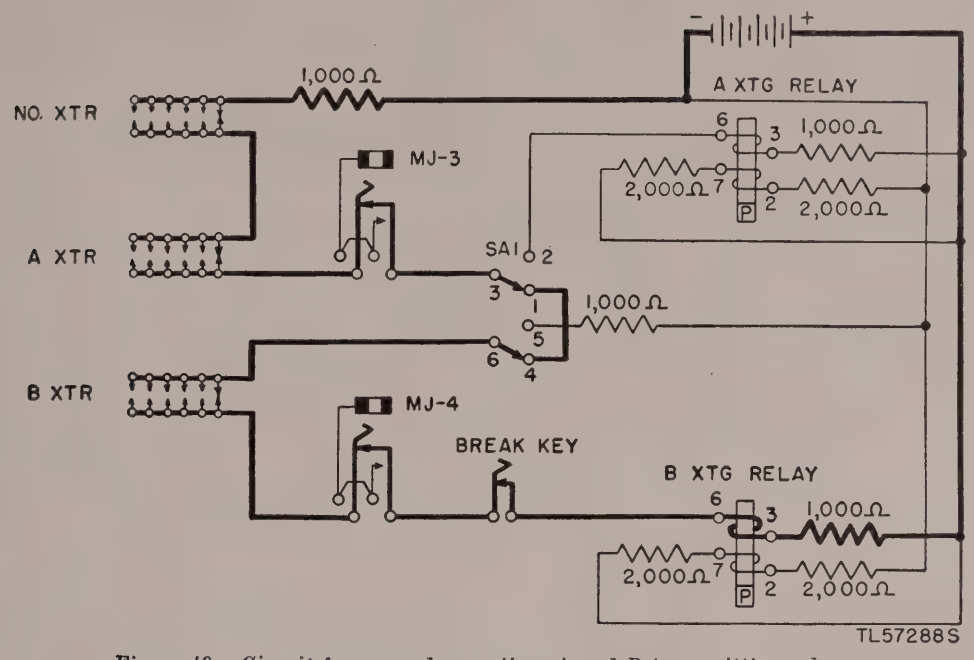

Figure 49. Circuit for normal operation, A and B transmitting relays.

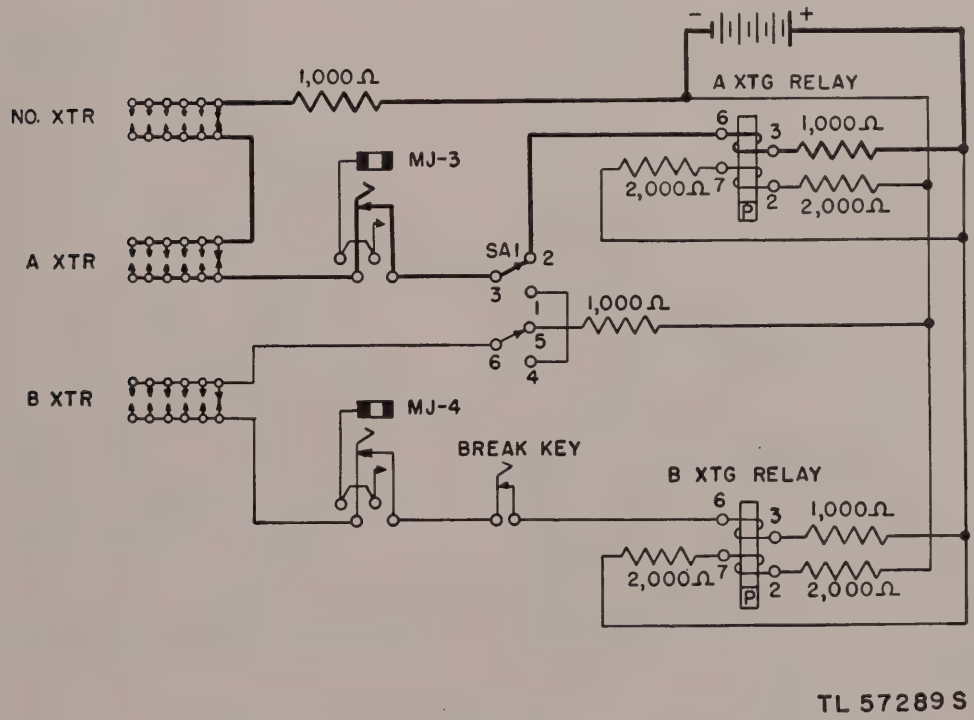

Figure 50. Circuit for split operation, A transmitting relay.

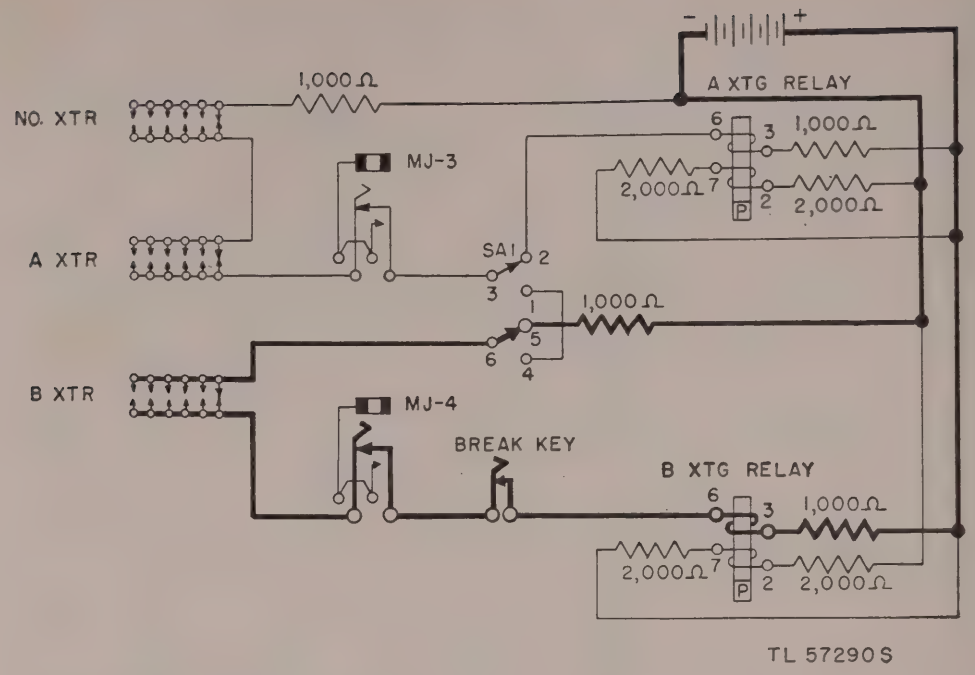

Figure 51. Circuit for split operation, B transmitting relay.

102. Detailed Functioning of Break Key

a. Normal Operation. The BREAK KEY is in series with operating-winding 3–6 of the B transmitting relay (fig. 49). Operation of the BREAK KEY opens the circuit to operating-winding 3–6, causing the B transmitting relay tongue to move to spacing and to send a spacing impulse to the line for as long as the break key is held depressed.

b. Split Operation. In split operation the BREAK KEY is not associated with the A transmitting relay and therefore it is impossible to send a break signal on circuit No. 1 (fig. 50) by operation of the BREAK KEY. (A break signal may be sent on circuit No. 1 by inserting a dummy plug in jack MJ–3.) It is possible to send a break signal on circuit No. 2 (fig. 51).

103. Detailed Functioning of Feed-Out Key FO–1 and Relay RR1

a. Normal Operation (fig. 52). With switch SA in the NORMAL position, receiving relay REC–1 is the monitor relay and controls the monitor (upper) typing reperforator which is plugged into jack PJ–1. The circuit (heavy line, fig. 52A) may be traced from battery 5, through jacks MJ–1 and PJ–1, to marking contact 4 of receiving relay REC–1, to ground. Signals through the windings of REC–1 will be recorded by the monitor (upper) typing reperforator.

(1) Any time the monitor typing reperforator is idle, tape may be fed out by depressing feed-out key FO–1. Depressing FO–1 completes the circuit (heavy line, fig. 52B) as follows: from battery 5, through SA1–9, FO–1, and RR1–1/2, to ground. The application of ground deprives the typing reperforator magnet of sufficient battery to operate, releasing the reperforator magnet and allowing the typing reperforator to feed out blanks.

(2) If, while key FO–1 is held depressed, receiving relay REC–1 moves its tongue to spacing, a circuit (heavy line, fig. 52C) is completed for energizing relay RR1. This circuit may be traced from battery 6, through contacts 3 and 4 of FO–1, through winding of RR1 and spacing contact 5 of REC–1, to ground.

(3) RR1 operates, closing its holding circuit (heavy line, fig. 52D) at RR1–3, opening

its energizing circuit at RR1–4/5, and breaking the feed-out ground at RR1–2/1, thus placing the reperforator magnet again under control of receiving relay REC–1. RR1 is thus held operated until key FO–1 is released.

(4) The 1,500-ohm resistor between battery 7 and spacing contact 5 of REC–1 provides a constant load on the spacing contact. This is necessary to prevent sudden changes of load from causing voltage variations in the rectifier output.

b. Split Operation (fig. 53). With switch SA at SPLIT, receiving relay REC–1 becomes the receiving relay for circuit No. 1 and operates the receiving (lower) typing reperforator instead of the monitor (upper) typing reperforator which is now controlled by relay REC–2 (fig. 56). When thrown to SPLIT, switch SA removes jacks MJ–1 and PJ–1 from between battery 5 and the marking contact of REC–1 and replaces them by jacks MJ–2 and PJ–2 (heavy line, fig. 53). The receiving (lower) typing reperforator is plugged into PJ–2. The operation of feed-out key FO–1 in split operation is the same as in normal operation except that it feeds out the receiving (lower) typing reperforator instead of the monitor (upper) typing reperforator.

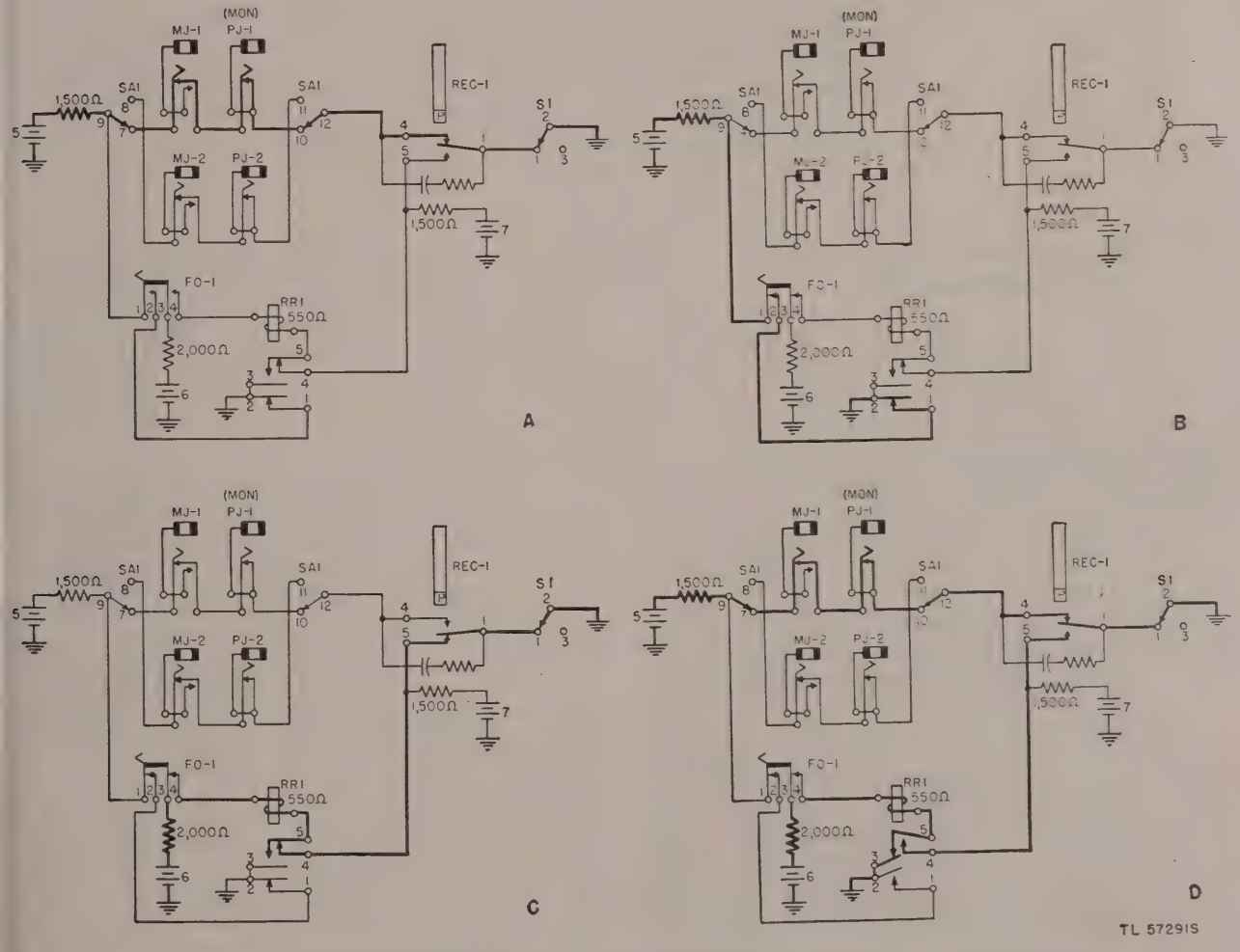

Figure 52. Circuit for feed-out key FO–1, relay RR1, and relay REC–1, normal operation.

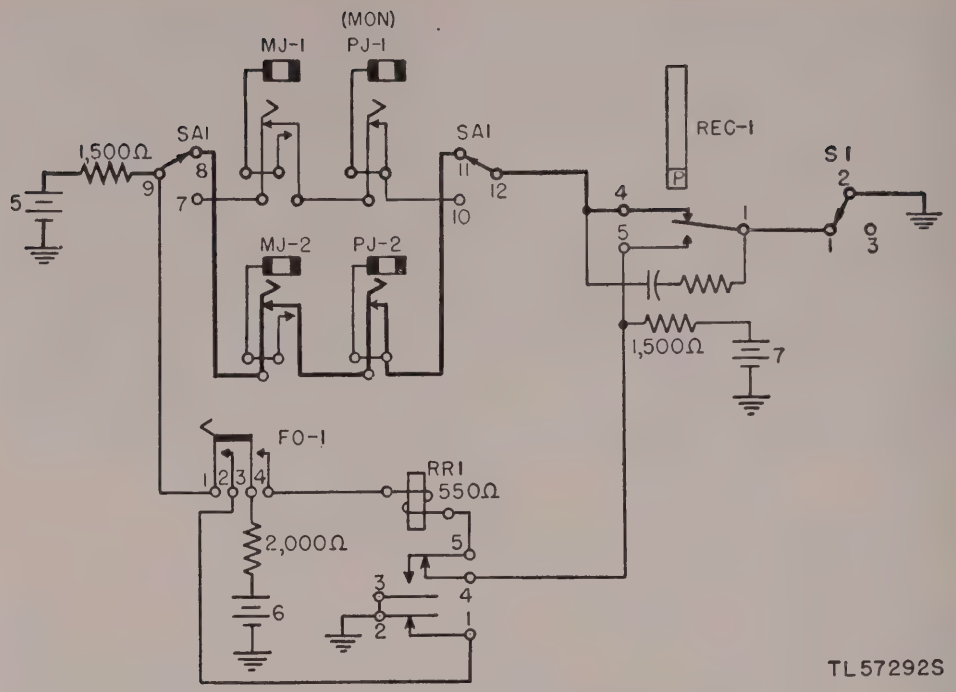

Figure 53. Circuit for relays REC–1 and RR1, split operation.

104. Detailed Functioning of Feed-out Key FO–2 and Relay RR2

a. Normal Duplex Operation (fig. 54). With switch SA at NORMAL, receiving relay REC–2 controls the receiving (lower) typing reperforator. The circuit (heavy line, fig. 54) is from battery 8, through jacks MJ–2 and PJ–2, to marking contact 4 of receiving relay REC–2, to ground. Signals through the winding of relay REC–2 will be recorded by the receiving (lower) typing reperforator.

(1) The feed-out circuit is similar to that described in paragraph 103*a* (1), ground being applied to SA2–3 through RR2–23/24.

(2) With the tongue of receiving relay REC–2 moved to spacing, the energizing circuit for RR2 is similar to that for RR1 (par. 103*a* (2)): from battery 9, through contacts 3 and 4 of FO–2, through winding of RR2 and spacing contact 5 of relay REC–2, to ground.

(3) RR2 operates, closing its holding circuit at RR2–26, opening its energizing circuit at RR2–27/28, and breaking the feed-out ground at RR2–24/23, thus placing the reperforator magnet again under control of receiving relay REC–2. RR2 is held operated until feed-out key FO–2 is released.

(4) The 1,500-ohm resistor between battery 10 and spacing contact 5 of REC–2 provides a constant load on the spacing contact. This is necessary to prevent sudden changes of load from causing voltage variations in the rectifier output.

b. Normal Single Operation (fig. 55). With switch SA in the NORMAL position and switch SB in the SINGLE position, battery 9 is applied permanently to the winding of RR2 over contacts SB1–8/9 (heavy lines, fig. 55).

(1) The energizing circuit (heavy line, fig. 55A) for RR2 is from battery 9, through contacts SR1–8/9, winding of RR2, SB1–12/11, RB–2/1, RA–1/2, spacing contact 5 of REC–2, to ground. If RA and RB are not operated (transmitters

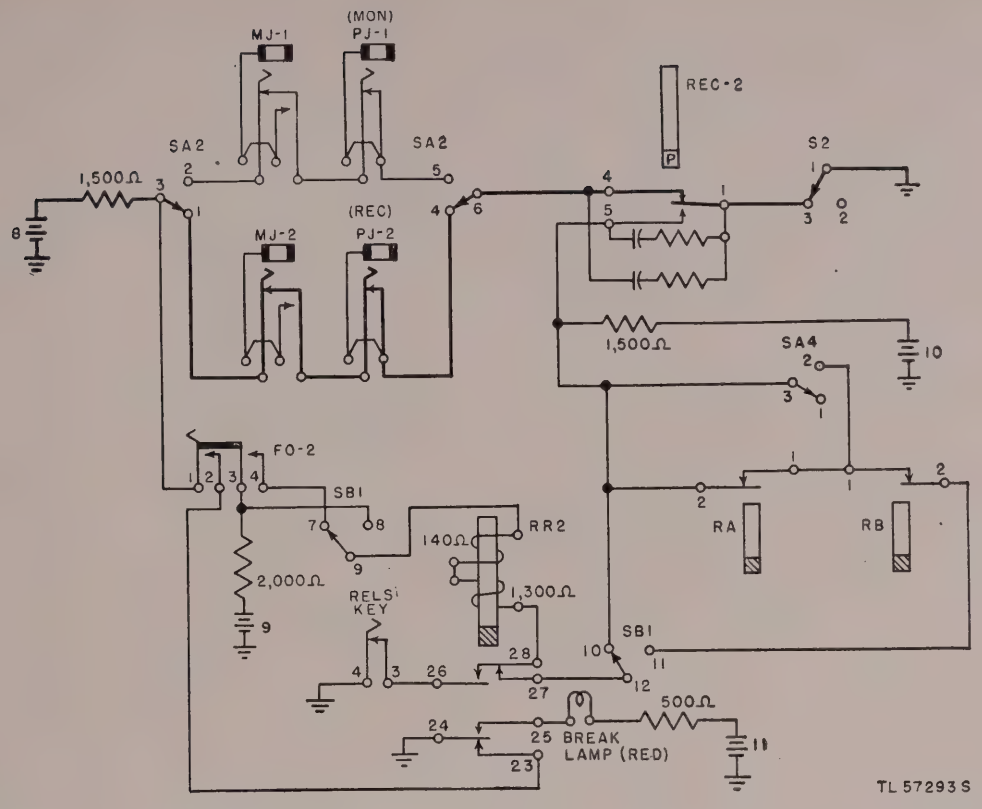

Figure 54. Circuit for feed-out key FO–2, relay RR2, and relay REC–2, normal duplex operation.

idle), regardless of whether or not FO–2 is depressed, RB2 is energized as soon as the tongue of REC–2 moves to its spacing contact; that is, on receipt of the first start impulse.

(2) The feed-out circuit is routed as described in *a* (1) above and is disabled by operation of RR2.

(3) RR2, when operated, closes its holding circuit (heavy line, fig. 55B) through RR2–28/26 and RELEASE KEY to ground.

(4) Operation of RR2 closes contacts RR2–24/25 completing the circuit (heavy line, fig. 55B) from battery 11 through the break (red) lamp to ground, causing the break lamp to light. Operation of RR2 blocks all transmitters. Transmission remains blocked and the break lamp remains lighted until the RELEASE KEY is depressed.

c. Split Operation (fig. 56). Throwing switch SA to the SPLIT position removes jacks MJ–2 and PJ–2 from between battery 8 and the marking contact of REC–2 and places jacks MJ–1 and PJ–1 between battery 8 and the marking contact of REC–2. The monitor (upper) typing reperforator therefore is placed under control of receiving relay REC–2 and becomes a receiving typing reperforator for circuit No. 2. With switch SA at SPLIT and switch SB at SINGLE, switch SA also shorts out contacts RA–2/1, so that operation of RR2 (circuit No. 2) is independent of the operation of RA (circuit No. 1).

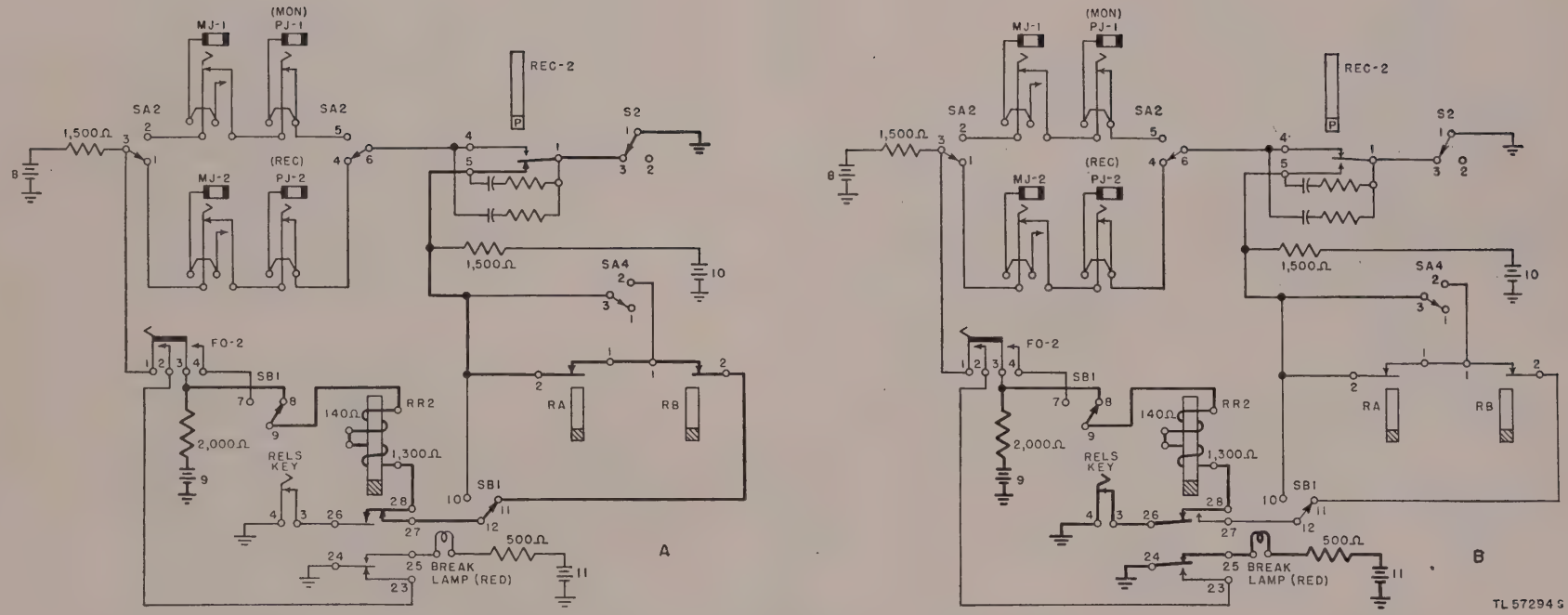

Figure 55. Circuit for relay RR2, normal single operation.

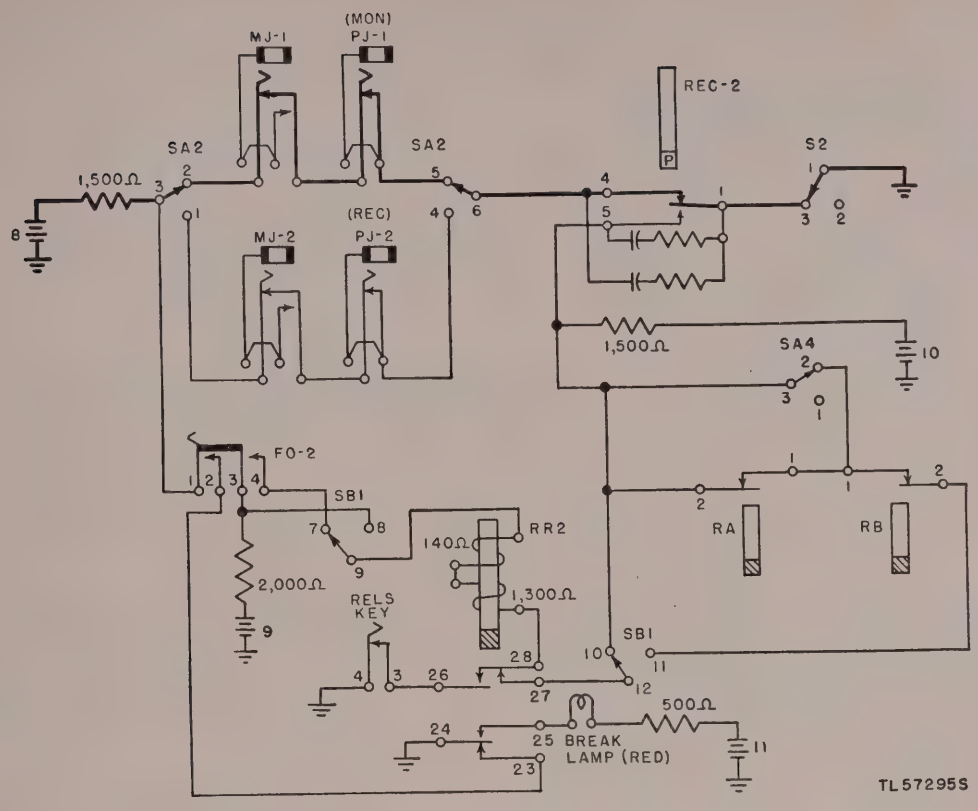

Figure 56. Circuit for relay REC–2, split operation.

105. Locking-Out of Typing Reperforators

a. Normal Single Operation (fig. 57). With switch SA at NORMAL and switch SB at SINGLE, the line signals, whether sent or received, operate both receiving relays REC–1 and REC–2.

(1) To prevent the received copy from being recorded on the monitor (upper) typing reperforator, the monitor typing reperforator is held idle during reception. This circuit (heavy line, fig. 57) for the monitor typing reperforator is from battery 5, through SA1–9/7, jacks MJ–1 and PJ–1 and monitor reperforator magnet, through SA1–10/12, SB1–5/6, RA–3/4, SA3–10/12, RB–3/4, and RR2–5/6, to ground. Steady current passes through the monitor typing reperforator, holding it nonoperative, or in the idle condition. As soon as reception starts, REC–2 moves its tongue to spacing and RR2 is operated, as described in paragraph 104*b*. Operation of RR2 applies ground through RR2–4, SA2–9/7, SB1–6/5, SA1–12/10, jacks PJ–1 and MJ–1, SA1–7/9, to ground, maintaining the steady current through the monitor (upper) typing reperforator regardless of the operation of relay REC–1. Therefore so long as reception is in progress the monitor typing reperforator is held idle. When transmission is in progress, RR2 is not operated and the locking circuit is broken at RA–3 or RB–3, whichever is operated. Therefore the monitor typing reperforator is free to record the outgoing message.

(2) A similar circuit is provided to prevent the sent copy from being recorded on the receiving (lower) typing reperforator. The circuit (heavy dotted line, fig. 57) is from battery 8, through SA2–3/1, jacks MJ–2 and PJ–2 and the receiving reperforator magnet, through SA2–4/6, SB2–5/6, RB–5/4 (RB will be operated during transmission), and RR2–5/6 to ground. Steady current passes through the receiving (lower) reperforator magnet holding the receiving (lower) typing reperforator nonoperative regardless of operation

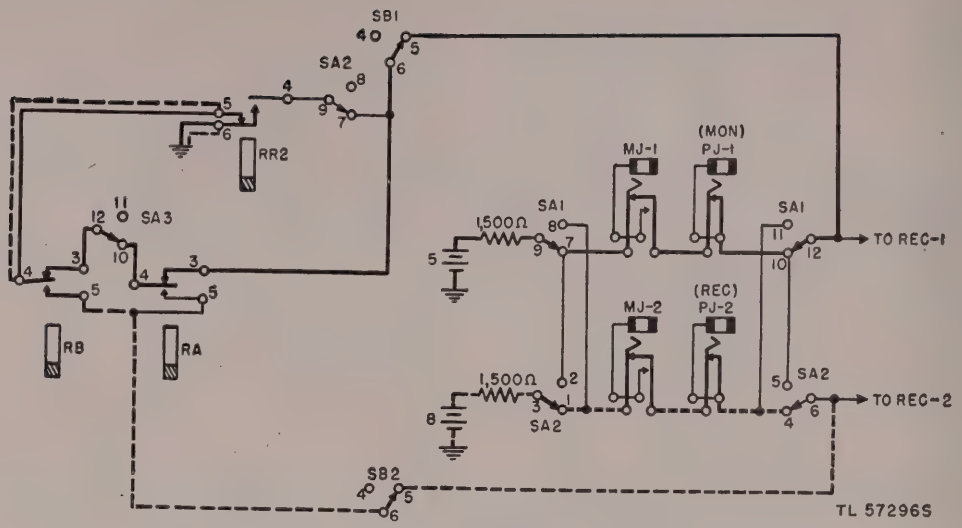

Figure 57. Reperforator lock-out circuits, normal single operation.

of receiving relay REC–2. The lock is broken upon release of RB (or RA), leaving the receiving typing reperforator free to record the received copy.

b. Split Single Operation (fig. 58). With switch SB at SINGLE and switch SA at SPLIT, switch SA interchanges the monitor (upper) typing reperforator and the receiving (lower) typing reperforator (pars. 103 and 104), and disables the receiving reperforator lock at contacts SA2–7 and SA3–10.

(1) The receiving lock-out for circuit No. 1 having been disabled at SA2–7 and SA3–10, the receiving (lower) typing reperforator, under control of receiving relay REC–1, records both the sent and received messages on circuit No. 1. (Figure 58, heavy line, shows the disabled lock-out for the receiving typing reperforator.)

(2) The monitor (upper) typing reperforator, acting as the receiving typing reperforator for circuit No. 2, records only the received messages. The lock-out circuit, similar to the lock-out circuits described in *a* above, is shown in dotted line, figure 58. When relay RB is nonoperated the lock-out is disabled at RB–4/5, permitting received messages to be recorded on the upper typing reperforator.

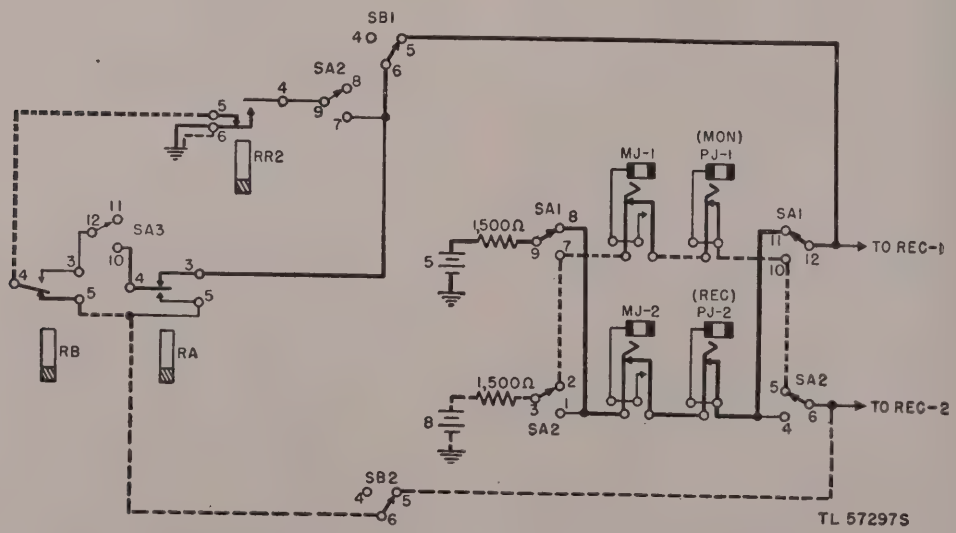

Figure 58. Reperforator lock-out circuit, split single operation.

106. Call-in Circuit

When Teletypewriter Set AN/TGC–1 (or AN/TGC–1A) is to be left unattended the alarm switch (ALARM OFF (Button Out)) may be thrown on. This puts battery 12 on the windings of call-in relay RC.

a. Normal Operation (fig. 59). With switch SA in the NORMAL position, only the lower winding of RC is operative. When relay REC–2

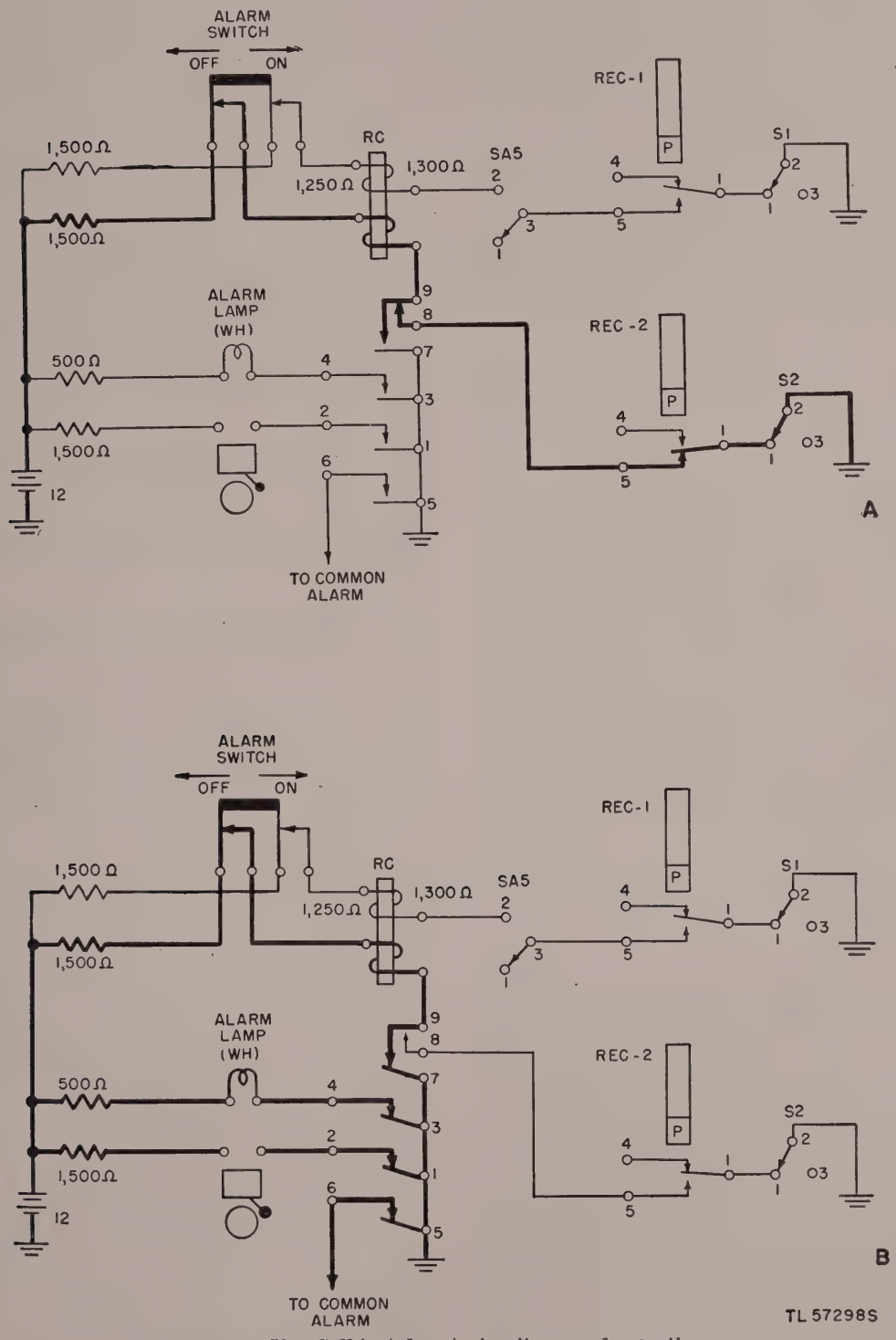

Figure 59. Call-in (alarm) circuit, normal operation.

moves its tongue to spacing, the energizing circuit (heavy line, fig. 59A) for relay RC is from battery 12, through lower winding of RC, contacts RC–9/8, spacing contact 5 of REC–2, S2–1/2, to ground. RC operates and locks itself through its contact RC–7 (fig. 59B). RC completes circuits to an alarm lamp (white), through contacts RC–3/4, to a warning bell, through contacts RC–1/2, and to an external circuit for a common alarm, through contacts RC–5/6. RC is released by throwing off the alarm switch.

b. Split Operation. When switch SA is thrown to SPLIT, the lower winding of RC remains connected to spacing contact 5 of REC–2 and the upper winding of RC is connected to spacing contact 5 of REC–1 through SA5–2/3. Thus the alarm is responsive to signals on either circuit No. 1 or circuit No. 2.

107. Break Circuit, Relays RBK1 and RBK2 (fig. 60)

a. Relay RBK1. Relay RBK1 normally is held operated. The circuit (heavy line, fig. 60A) is from battery 10 through winding of RBK1 to ground. When REC–2 moves its tongue to spacing, the winding of RBK1 is shorted out, but since RBK1 is a slow-release relay, it does not release during normal operation of REC–2. If, however, a long spacing impulse is received, as when a break signal is received (par. 102), relay RBK1 is released. Note that since relays RR2 and RC also are connected to spacing contact 5 of REC–2, as described in paragraphs 104 and 106, small leak currents flow through the windings of these relays and through RBK–1. These currents are too small to operate either relay RC or relay RR2 and do not affect the release of RBK1.

b. Relay RBK2.

(1) Relay RBK2 normally is held operated by relay RBK1; the circuit (heavy line, fig. 60B) is from battery 13, through RBK2 winding, RBK2–3/4, RBK1–2/1, to ground. Upon release of RBK1, relay RBK2, which also is a slow-release relay, is released. Release of RBK2 lights the break lamp (fig. 60) and stops the A or B transmitter unit (fig. 41), disabling the A or B transmitter circuit at RBK2–5/6 and RBK2–7/8. When RBK2 is released it breaks its own energizing circuit. Once released RBK2 cannot be reenergized by RBK1 and may be energized only by depressing the RELEASE KEY, which applies ground directly to the winding of RBK2.

(2) The break feature is not required in duplex operation. When switch SB is thrown to DUPLEX, ground is applied through SB2–7/9 to RBK2–4, holding RBK2 operated regardless of the release of RBK1.

(3) By throwing switch S2 to NON-OPR. (par. 121), ground also may be applied through S2–2/3 to RBK2–4, holding RBK2 operated.

(4) With switch SA thrown to SPLIT, contacts RBK2–7/8 are shorted out through SA2–12/11. Thus, when operating SPLIT, the release of RBK2 stops only the B transmitter unit, circuit No. 2, and does not affect circuit No. 1.

108. Detailed Functioning of Components

The following paragraphs describe in detail the functioning of individual components of Teletypewriter Sets AN/TGC–1 and AN/TGC–1A.

109. Detailed Functioning of Signal Indicator Panel

The signal indicator panel is located at the top of the console and housed in a demountable box which is connected electrically to the main console by means of a plug and socket. See figures 23 and 118 for assembly and wiring diagrams of the signal indicator panel.

a. Number Release Key. Depressing the NUMBER RELEASE key opens the number transmitter magnet circuit (fig. 44). Therefore, if the NUMBER RELEASE key is depressed when a tape is put in the A or B message transmitter unit and is held depressed until after transmitter start lever MB is released, relay RN will be energized immediately after RA or RB operates and no number will be transmitted.

b. Alarm Lamp (White). The white alarm lamp (par. 106, fig. 59) lights when a long break signal is received from a distant station.

c. Alarm Off (Button Out) Switch. The ALARM OFF (Button Out) switch operates (par. 106, fig. 59) by making or breaking battery connection to the windings of call-in relay RC. With the ALARM OFF switch in the ON position, bat-

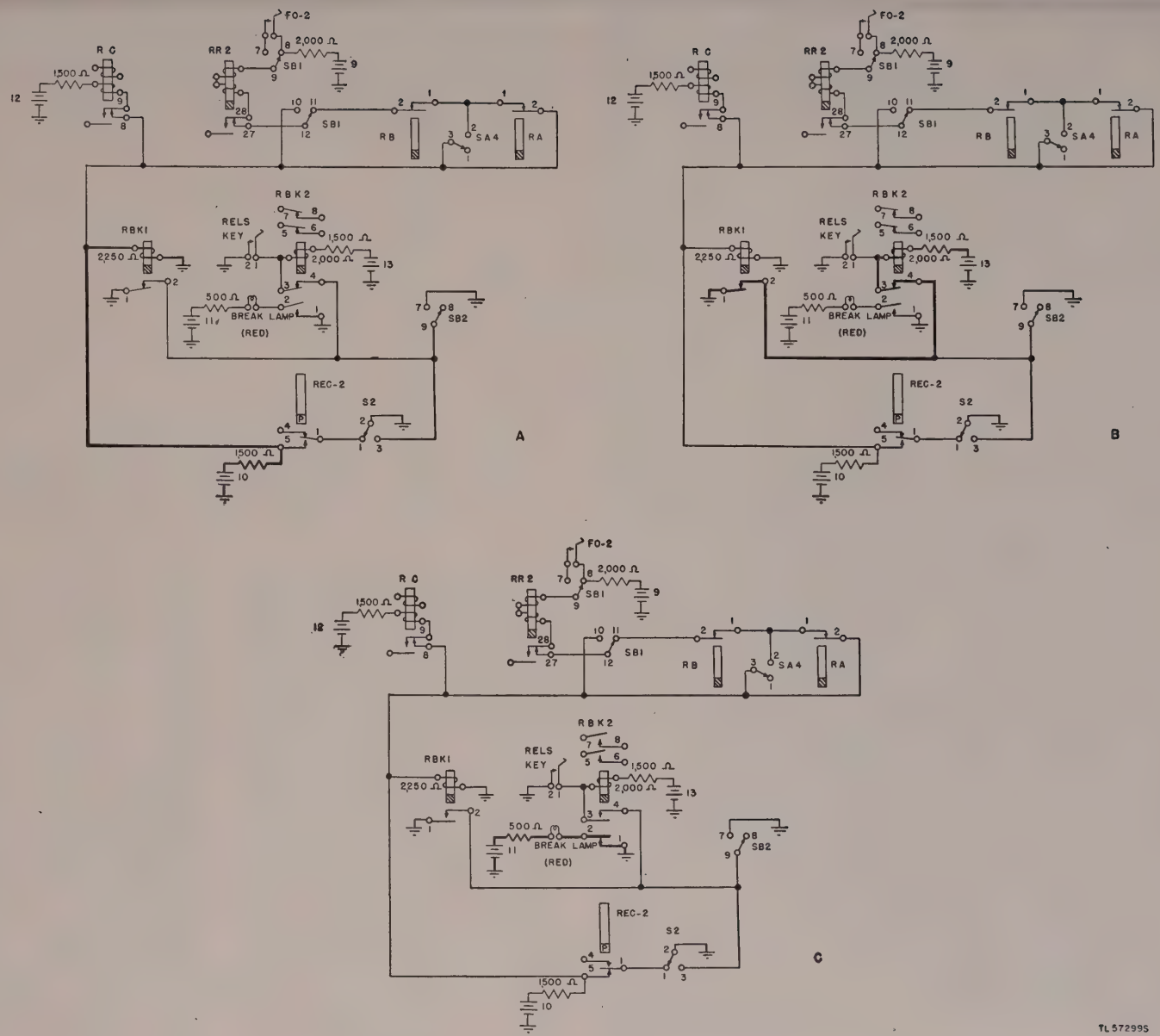

Figure 60. Break circuit, relays RBK1 and RBK2.

tery is supplied to the windings of relay RC, operating the white alarm lamp and the alarm bell, when a break signal is received from a distant station through receiving relay REC–2 (or relay REC–1 when switch SA5 is in the SPLIT position).

d. No. 1 Tape Feed-Out No. 2 (Feed-Out Keys FO–1 and FO–2). Feed-out keys FO–1 and FO–2 are for the purpose of feeding tape out of the two typing reperforators when no messages are being received. Feed-out control relays RR1 and RR2 work with keys FO–1 and FO–2, respectively, for this purpose. Depressing feed-out key FO–1 applies ground to switch SA1–9 through contacts RR1–1/2 (fig. 52); depressing feed-out key FO–2 applies ground to switch SA2–3 through contacts RR2–23/24 (fig. 54). The applied ground deprives the typing reperforator magnet of sufficient battery to operate, releasing the reperforator magnet and allowing the typing reperforator to feed out blanks.

e. Release Key. The RELEASE KEY has a dual function—releasing feed-out control relay RR2 (fig. 55) or reoperating break relay RBK2 (fig. 60) to release the message transmitter units for operation.

f. Break Lamp. The break lamp, a red lamp operated by relay RR2 (fig. 55) or RBK2 (fig. 60), indicates that the transmitter units have been locked out by either of the two relays and must be released for transmission.

g. Break Key. The BREAK KEY is for the purpose of sending a break signal to the distant station. Depressing the BREAK KEY for approximately 3 to 5 seconds moves receiving relay REC–1 or REC–2 of the distant Teletypewriter Set AN/TGC–1 or AN/TGC–1A to its spacing contact, releasing relay RBK1 and operating the break lamp.

110. Detailed Functioning of Monitor (Upper) Typing Reperforator

For information on the detailed functioning of the monitor (upper) typing reperforator, see TM 11–2223.

111. Detailed Functioning of Tape Winder

The tape winder consists of an a-c d-c-series motor, reduction gear, clutch, 10-inch reel, and illuminating lamp, mounted on a base. The tape winder provides the means by which the tape from the monitor (upper) typing reperforator is wound automatically for possible future use.

Note. As the present issues of tape-winder motors (Sig C stock No. 3HS000–64) are replaced, they will be replaced by Barber-Colman Motor No. PYAZ–4433-1 (induction type). The Barber-Colman motor is an airplane-type motor and the entire unit is replaced when trouble occurs.

112. Detailed Functioning of Receiving (Lower) Typing Reperforator

For information on the detailed functioning of the receiving (lower) typing reperforator, see TM 11–2223.

113. Detailed Functioning of 54A Rectifier

The 54A rectifier is a dry disk selenium rectifier, with input transformer and output filter. It operates from a 110- to 120-volt, 50- to 60-cycle a-c supply. The rectifier output is approximately 600-m. a., 110-v. d-c. The transformer primary has taps to accommodate to reasonable variations of line voltage. See figures 21 and 121 for assembly and wiring diagrams.

114. Detailed Functioning of Multiple Transmitter Distributor and Base

a. The multiple transmitter distributor (fig. 61) is a transmitting mechanism which, when used in combination with typing reperforators, provides combined sending and receiving facilities for tape message relaying. A complete multiple transmitter distributor set consists of three transmitter distributor units and a motor unit mounted on a base which is equipped with cross shaft, gears, and terminal strips (figs. 65 and 66). Two of these transmitter distributor units are message transmitters (fig. 62) and the third is a number transmitter (fig. 64). The function of the number transmitter is to insert automatically into the signal line successive numbers, from a number tape, which will identify each message. The number transmitter is like the message transmitter except that the number transmitter is equipped with a letter-sensing mechanism which makes the number transmitter responsive to the letters code combination in the number tape, causing stopping of the number transmitter and starting of the message transmitter through external electrical control circuits (par. 98).

b. The multiple transmitter distributor (message or number transmitter units) is arranged to

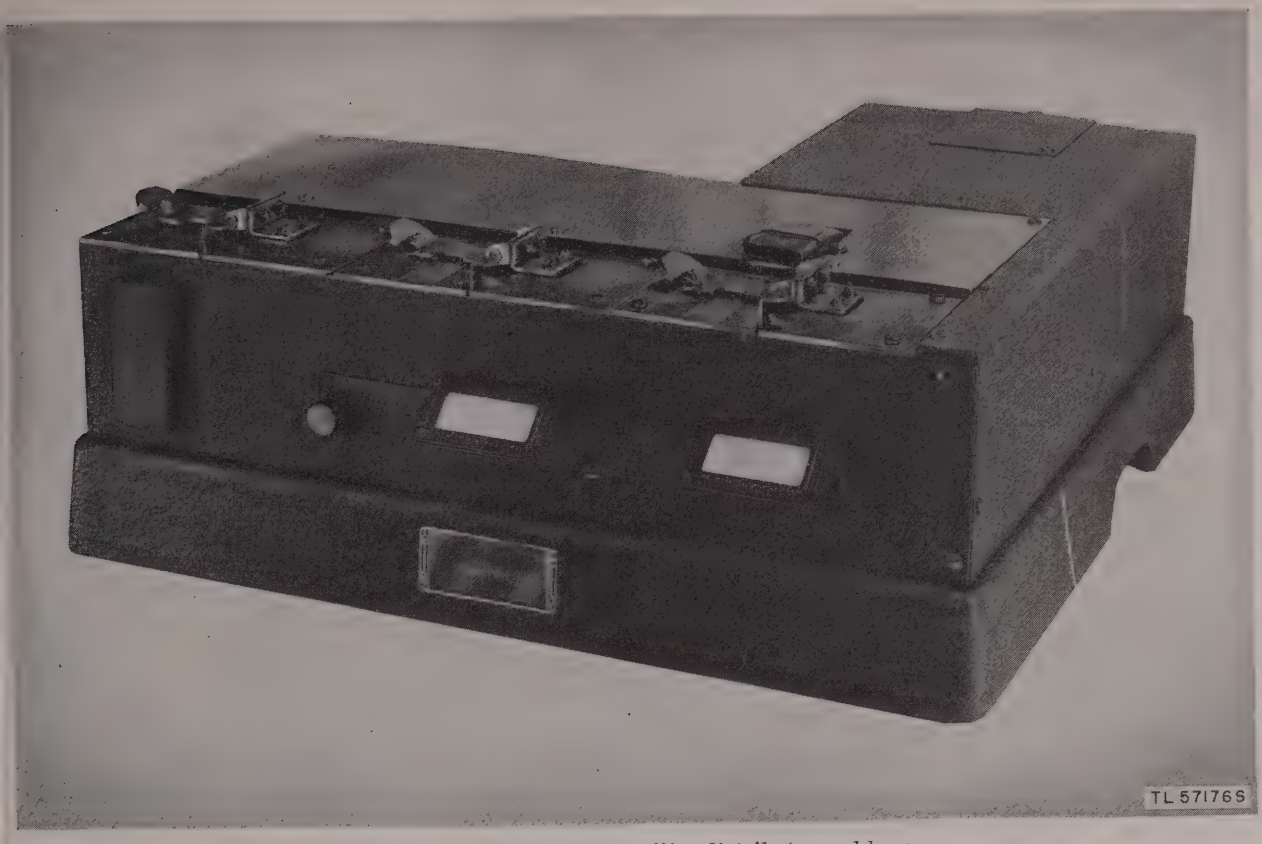

Figure 61. Multiple transmitter distributor and base.

handle either perforated or chadless tape received from other stations on reperforators or prepared locally on keyboard perforators.

115. Functioning of Message Transmitter Units (MXD8)

The message transmitter unit (fig. 62) consists essentially of the following mechanisms: a 7.42-unit code transmitting-cam cylinder with associated transmitting contacts, tape-feed and tape-sensing mechanisms, a hinged tape lid, an automatic tape-out control feature, a manual-control mechanism, a magnet-operated clutch, a driven gear, and a transmitting contacts filter (figs. 62 and 63).

a. Transmitting-Cam Cylinder. The transmitting-cam cylinder normally is held stationary because the clutch members on the transmitting shaft are held disengaged by the clutch throw-out lever (figs. 63 and 82). When the clutch magnets are energized, the clutch members engage and rotation of the transmitting-cam cylinder starts the cycle of operation.

b. Selector-lever Bail. The transfer of the code combination in the perforated tape to the contact levers which control the transmitting contacts is accomplished by the selector-lever bail (fig. 62), its cam, selector-lever pins, and selector levers. The selector-lever bail extension roller (fig. 83) rises from the indent on its cam and causes the selector-lever bail to move away from the selector levers. The selector-lever springs pull the selector levers up toward the tape. The selector-lever pins which encounter perforated holes in their path advance through the perforations, but the pins which do not encounter perforations as they come in contact with the tape are blocked by the tape and are prevented from advancing further.

c. Selector Levers. Each selector lever is positioned, through the medium of the perforations in the tape, to correspond with each signal impulse to be transmitted. Each selector lever controls the motion of a contact lever either by allowing the contact lever to close its contact when the cams revolve or by restricting the motion of the contact lever. If the selector-lever pin does not enter a perforation in the tape, corresponding to a spacing impulse, the lower end of the selector lever engages the associated contact lever and prevents it from rising into an indent of the cam, as the cam

rotates, thus holding the circuit open for that impulse. If the selector-lever pin enters a perforation in the tape, corresponding to a marking impulse, it does not interfere with the movement of the contact lever. Then, as the cam revolves, the contact lever rides on the cam periphery and drops into an indent, thereby allowing its contact to close and send out a marking impulse. As the cams rotate, the impulses, either marking or spacing, are transmitted in succession.

d. Start-stop Cam. The start-stop cam controls a contact lever which in turn actuates the start-stop contacts (fig. 63). These contacts are opened at the beginning of each revolution of the cam cylinder to transmit the start impulse (spacing) and remain open during the transmission of the five impulses. After the fifth impulse has been transmitted, the start-stop contacts again close, sending the stop impulse (marking) to the line.

e. Selector-Lever Bail Extension. After the fifth impulse has been transmitted, the selector-lever bail extension (fig. 62) drops into the indent in its cam, causing the selector-lever bail to retract all the selector levers from their sensing positions. At this moment the feed-pawl arm roller drops into the indent in its cam and the feed pawl (fig. 62) engages the feed-wheel ratchet, stepping it forward, thereby advancing the tape one character space over the selector-lever pins. A feed-wheel detent (fig. 62) establishes the relative setting of the feed wheel.

f. Clutch Magnets. The transmitting-cam cylinder rotates continuously so long as the clutch magnets are energized. An interruption of the clutch magnet circuit causes the clutch throw-out lever to engage the cammed surface of the driven member of the clutch (due to the action of the clutch throw-out lever spring) and, as the transmitting shaft rotates, the driven clutch member is cammed out of mesh with the driving member.

g. Tape-Out Contacts. Within the message transmitter there are two provisions for interrupting the clutch magnet circuit. The clutch magnets are connected in series with a set of automatically

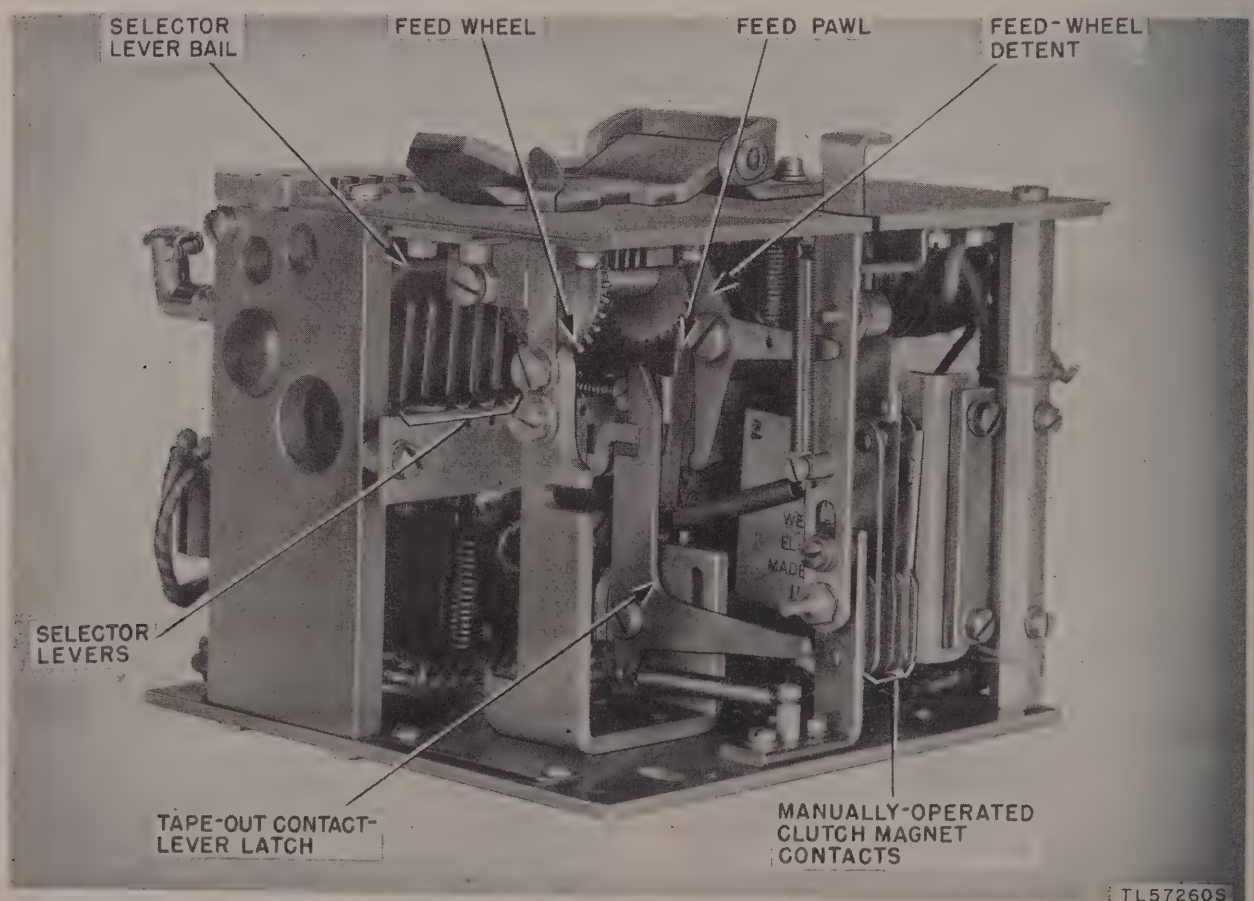

Figure 62. Message transmitter unit.

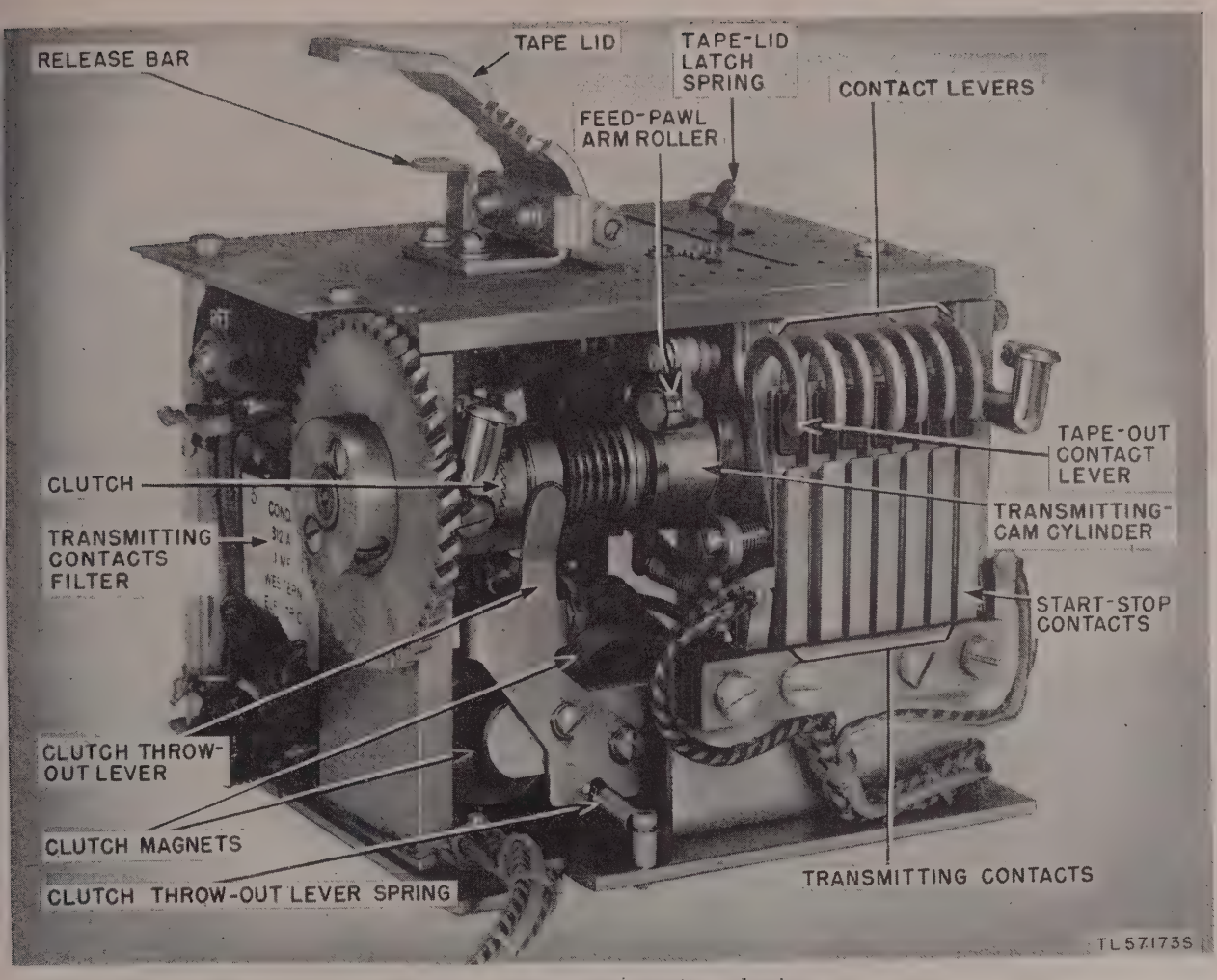

Figure 63. Transmitter-unit mechanisms.

operated contacts (MC, NC) and a set of manually operated contacts (MB, NB) (fig. 62). The opening of either set of contacts stops the message transmitter (par. 97).

(1) *Automatic contacts.* The automatic contacts are a function of the tape-out feature. The message transmitter has a tape-out sensing lever which operates in unison with the other five selector levers. The associated sensing pin (fig. 85B) is in line with and adjacent to the sensing pin for the first impulse. The tape-out sensing lever has a larger sensing area and a portion of its senses along the edge of the tape during the transmission of each character. When the end of the tape has passed through the message transmitter the tape-out sensing lever rises. Under this condition the lower end of the tape-out sensing lever does not interfere with the movement of its associated tape-out operating lever and this lever, in turn, is permitted to ride on its cam periphery (fig. 86). When the tape-out operating lever drops into the cam indent, a pin on the tape-out operating lever engages the tape-out contact lever, thus rotating the tape-out contact lever about its pivot until at one end of the tape-out contact lever the automatic contacts are opened, and on the other end the lever is latched by the tape-out contact lever latch. This interruption of the clutch magnet circuit by the opening of the automatic contacts stops the transmitter unit and renders it inoperative.

(2) *Manual contacts* (figs. 62 and 63). The manually operated contacts are controlled

by depressing the release bar. The bar may be depressed momentarily or it may be latched in the depressed position with a slight forward pressure. Operation of the release bar accomplishes three functions: opens the manual contacts to stop the transmitter; unlatches the tape-out contact thereby closing the tape-out contact; and disengages the feed-wheel detent and the feed pawl which permits the feed wheel to spin freely to aid in the insertion or alinement of tape over the feed pins. When the release bar is released, the manual contacts close and the transmitter operates.

h. Hinged Tape Lid (fig. 63). The message transmitter is equipped with a hinged tape lid which permits the use of perforated or chadless tape without altering its adjustments. Tape is inserted directly under the latched lid after depressing the release bar. For inserting tape loops, the lid may be unlatched.

116. Functioning of Number Transmitter Unit (MXD9) (fig. 64)

The functions of the number and message transmitters are identical with the exception of the letters-sensing mechanism (fig. 90) described below.

a. The letters-sensing mechanism is used to stop the number transmitter and to start one of the message transmitters when the letters code combination is sensed in the tape.

b. During every operating cycle, when the selector-lever pins are sensing the code combination in the tape, a letters operating lever senses the ends of the five selector levers. If one or more selector levers are in the spacing position, the letters operating lever is prevented from continuing its travel. If the code combination is letters (all marking

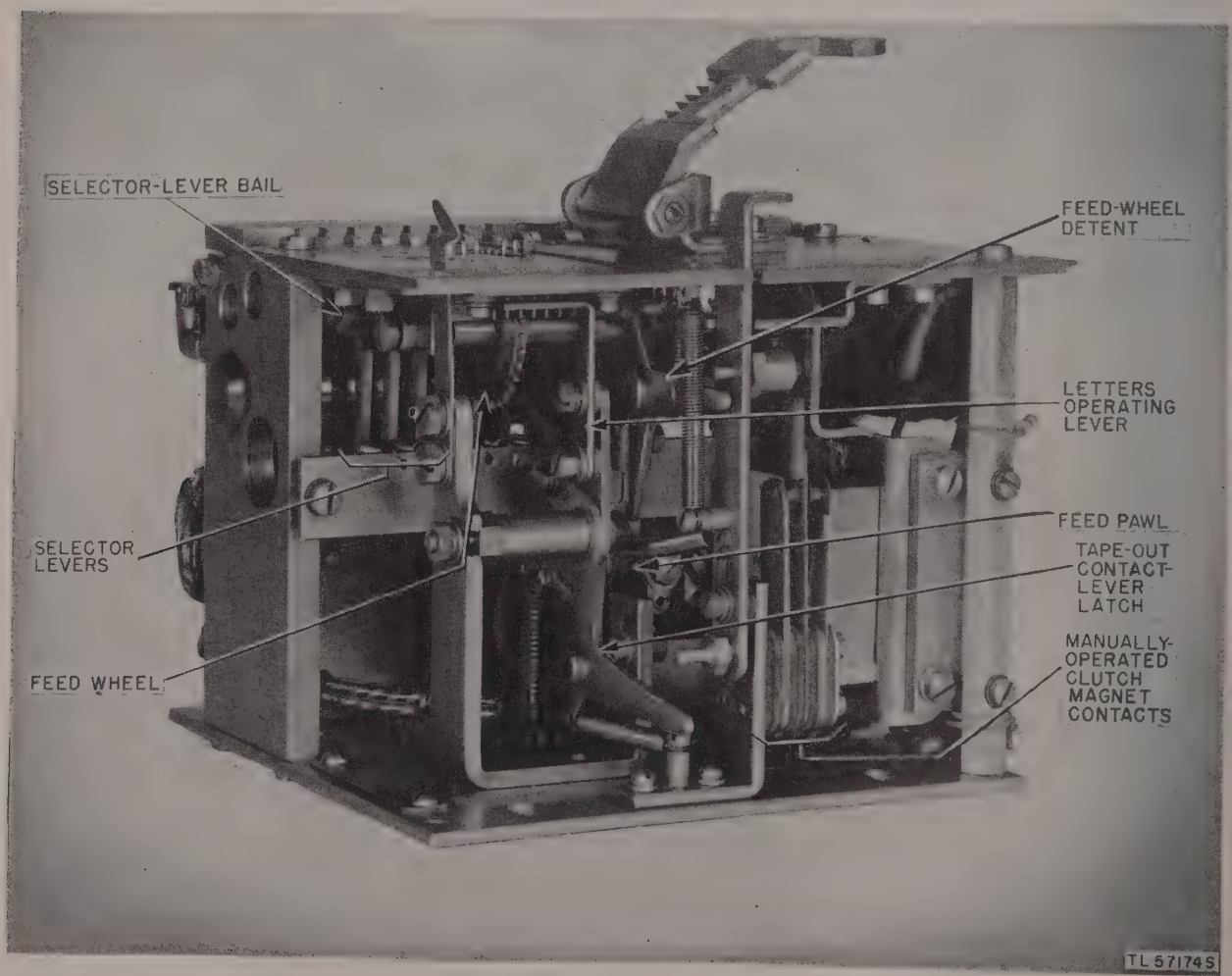

Figure 64. Number transmitter unit.

impulses), the letters operating lever is not blocked by any of the selector levers and therefore is rotated through a larger angle. The letters operating lever has two extensions, one of which rides on a cam and permits the letters operating lever to sense the selector levers, while the other engages the tape-out contact lever when a letters code combination is sensed in the tape and consequently opens the tape-out contacts. These contacts are opened momentarily since the tape-out contact lever latch is disabled in the number transmitter. The momentary opening of these contacts causes the number transmitter to stop, and starts one of the message transmitters by means of an external electrical control circuit (pars. 98 and 99).

117. Multiple Transmitter Distributor Base

a. The multiple transmitter distributor base has facilities for mounting a motor unit and three transmitter distributor units. The number transmitter is mounted on the left side, and the two message transmitters are mounted in the middle and on the right side (figs. 65 and 66). A series-governed motor is used for operation on 115-volt, 50- or 60-cycle a-c or 115-volt d-c. The motor is removable as a complete unit and is equipped with a governor filter (fig. 110).

b. The motor power is transmitted to individual transmitter distributor units through a cross shaft (fig. 65). Each transmitter distributor unit has an individual terminal strip to facilitate disconnecting the transmitter cable to remove the individual units. Underneath the base are the governor circuit elements, a terminal block for external power connections, and three sets of spark protectors for the automatic and manual contacts on the three transmitter units. A two-conductor power cord and an eight-conductor cable, which terminate in plugs, provide facilities for external connections.

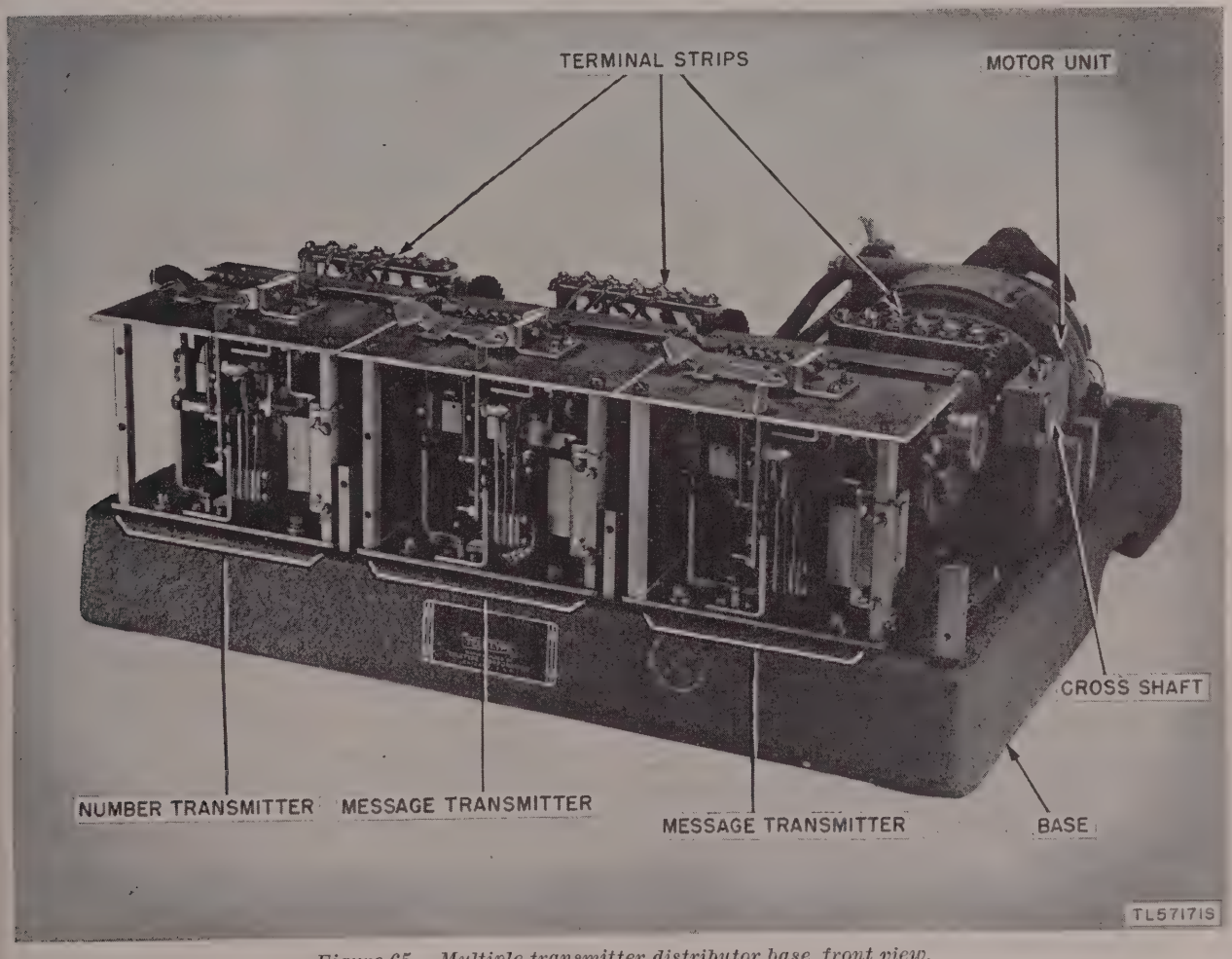

Figure 65. Multiple transmitter distributor base, front view.

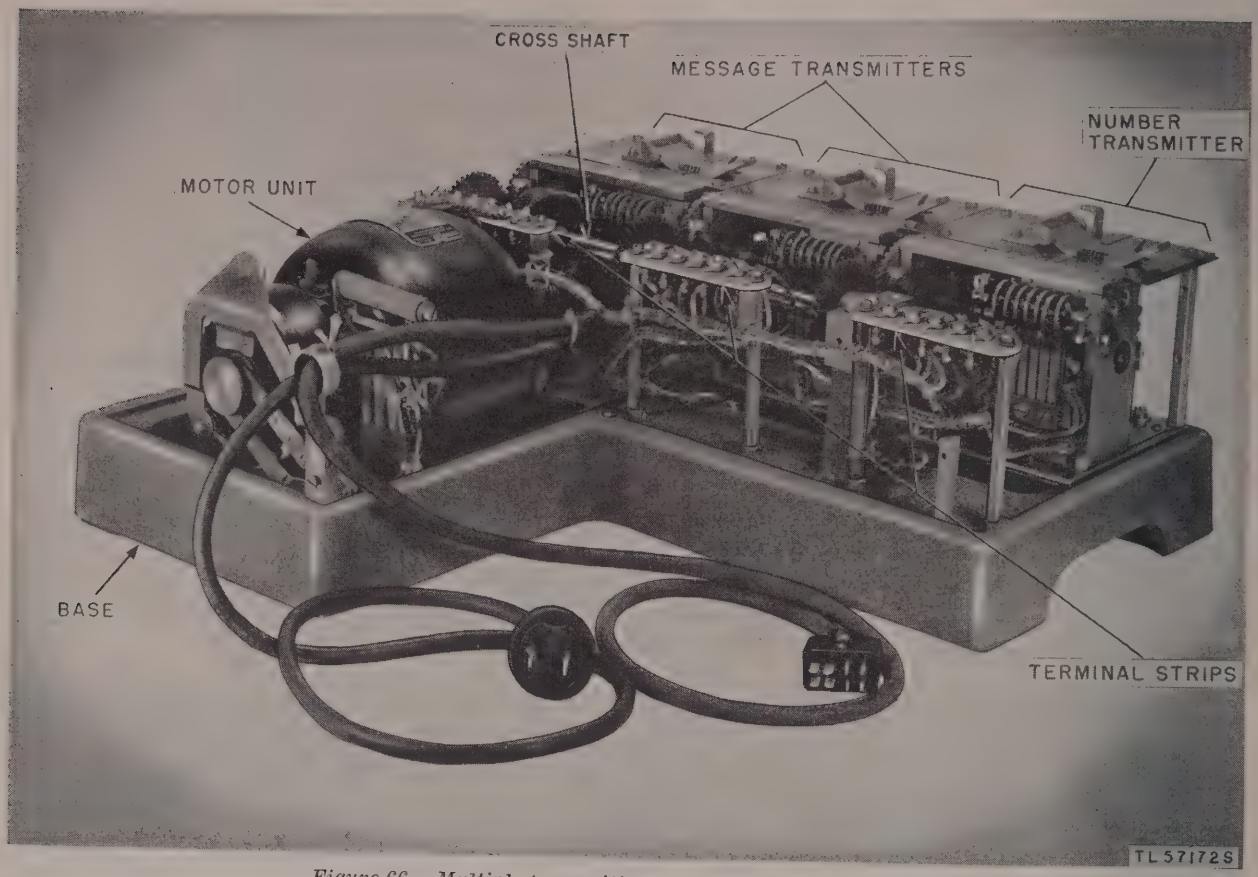

Figure 66. Multiple transmitter distributor base, rear view.

c. A complement of covers provides dust protection. Although the various sections of the covers are removable, a hinged lid is provided in the motor cover which may be opened easily to provide a view of the speed target and access to the speed-adjusting members. A guard is provided on the cover in front of the number transmitter through which the number tape will pass and be protected from damage from external sources. A tape chute directs the used tape from the message transmitter on the right. The front of the base is equipped with a cardholder (see fig. 61).

118. Detailed Functioning of Power Cabinet

The power cabinet comprises a male plug and base for the power input, main power switch, fuses for all circuits, AC-DC switch for adapting the set to a-c or d-c power supply, and the 10-ohm and 300-ohm series resistors which are shorted out for a-c operation of the transmitter and typing reperforator motors (par. 24*b* (1)). A power outlet also is provided into which the next adjacent Teletypewriter Set AN/TGC–1 may be plugged. See figures 20 and 125 for assembly and wiring diagrams.

119. NORMAL SPLIT Switch SA

The NORMAL SPLIT switch, SA, makes all changes necessary in switching from one-circuit to two-circuit operation. Switch SA is a five-section rotary switch housed in the equipment drawer.

120. DUPLEX SINGLE Switch SB

The DUPLEX SINGLE switch, SB, makes all changes necessary in switching from duplex to single operation. Switch SB is a two-section rotary switch housed in the equipment drawer. When the teletypewriter set is on SPLIT operation, switch SB operates only on circuit No. 2. Circuit No. 1 may be operated duplex or single regardless of the position of switch SB.

121. OPR. NON-OPR. Switches S1 and S2

The OPR. NON–OPR. switches, S1 and S2, remove ground from the tongues of receiving relays

REC–1 and REC–2 respectively. When the teletypewriter set operates SPLIT, if one of the circuits is disconnected, line relay REC–1 (or REC–2) might lie on its spacing contact, interfering with the proper operation of the alarm and/or break circuits. To avoid this, switch S1 for circuit No. 1 breaks the ground connection from the tongue of relay REC–1, disabling the alarm for that circuit. Similarly, switch S2 breaks the ground connection from the tongue of relay REC–2, disabling the alarm; at the same time S2 puts ground on the winding of relay RBK2, disabling the break feature.

122. POLAR MAKE-BREAK Switches S3 and S4

The POLAR MAKE-BREAK switches, S3 and S4, adapt the teletypewriter set to polar or make-and-break operation. In the POLAR position, the center-tapped resistors are batteried to provide a return point for the polar signals from the transmitting relays. In the MAKE-BREAK position, the center-tapped resistors are disconnected and the bias windings of relays REC–1 and REC–2 are batteried.

123. Transmitting and Receiving Relays

There are four No. 255A relays in the equipment drawer; two are used as transmitting relays. When working NORMAL, the B transmitting relay is operated by all transmitters, the A transmitting relay being idle. When operating SPLIT, the A transmitting relay is operated by the number and A transmitter units and sends to circuit No. 1, while the B transmitting relay is operated by the B transmitter and sends to circuit No. 2. The other two No. 255A relays are used for receiving. In NORMAL operation, relay REC–1 controls the monitor (upper) typing reperforator, while REC–2 controls the receiving (lower) typing reperforator. When operating SPLIT, the controls are reversed—REC–1 controls the receiving (lower) typing reperforator, which receives from circuit No. 1; REC–2 controls the monitor (upper) typing reperforator, which receives from circuit No. 2.

124. RA, RB, RN, and RNN Relays

Relays RA, RB, RN, and RNN together form a group for controlling the operation of the transmitter units. The sequence of operations is described in paragraphs 97 through 100.

125. RR1 and RR2 Relays

Relays RR1 and RR2 are the feed-out control relays, RR1 being associated with feed-out key FO–1 and with receiving relay REC–1, relay RR2 being associated with feed-out key FO–2 and with relay REC–2. Their functions are described in paragraphs 103 and 104.

126. RBK1, RBK2, and RC Relays

Relays RBK1 and RBK2 are the break relays. Relay RC is the call-in relay. The functions of these three relays are described in paragraph 107.

Section XIV. TEST EQUIPMENT

127. Test Unit

Test Unit I–176 or equivalent is satisfactory for testing current flow in, and continuity, insulation, or resistance of, the electrical circuits in Teletypewriter Set AN/TGC–1 (or AN/TGC–1A). The following paragraphs give a brief description and the purpose of the test sets most frequently used by teletypewriter repairmen.

128. Test Unit I–176 (fig. 67)

Test Unit I–176 is designed to measure resistance, alternating current, direct current, and voltage over a wide range of values. See TM 11–2626 for a complete description of this test unit.

129. Test Set TS–2/TG

Test Set TS–2/TG (fig. 68) is a portable motor-driven unit arranged to transmit normal or distorted signals for testing teletypewriter circuits and for checking the efficiency of start-stop selector units on teletypewriters. It sets up two types of distortion, marking or spacing bias, and marking or spacing end distortion. Any one of the four test signals, R, Y, SPACE, or a test message, may

Figure 67. Test Unit I–176.

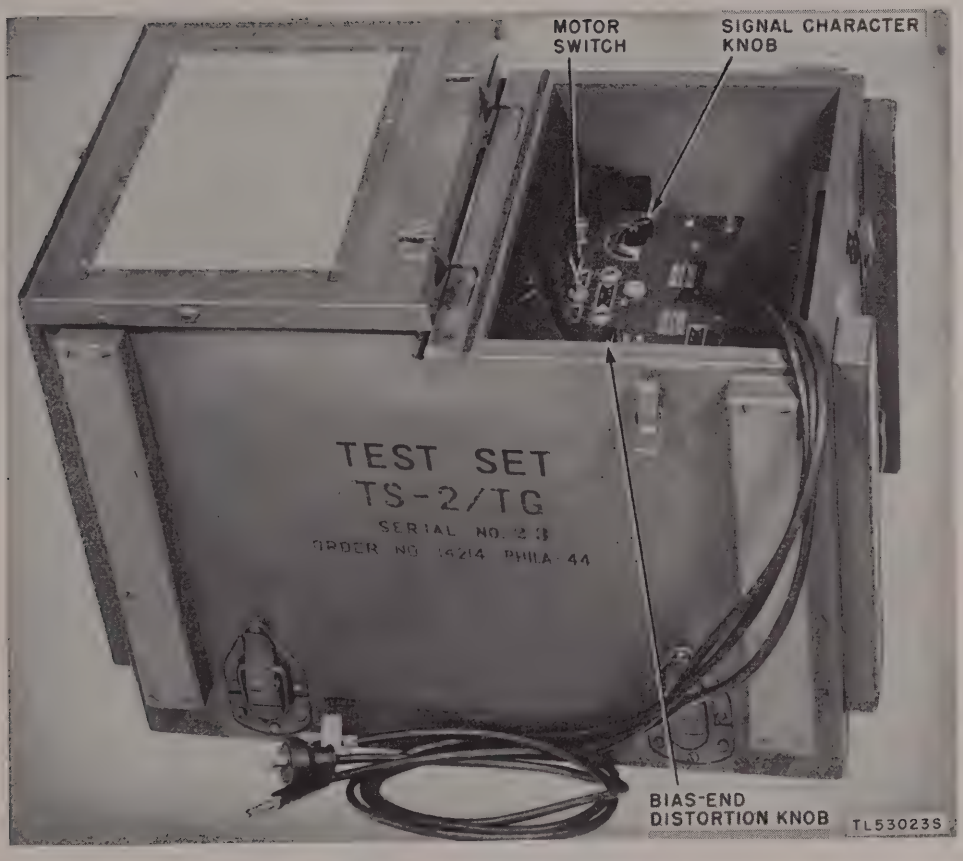

Figure 68. Test Set TS–2/TG, with chest cover open.

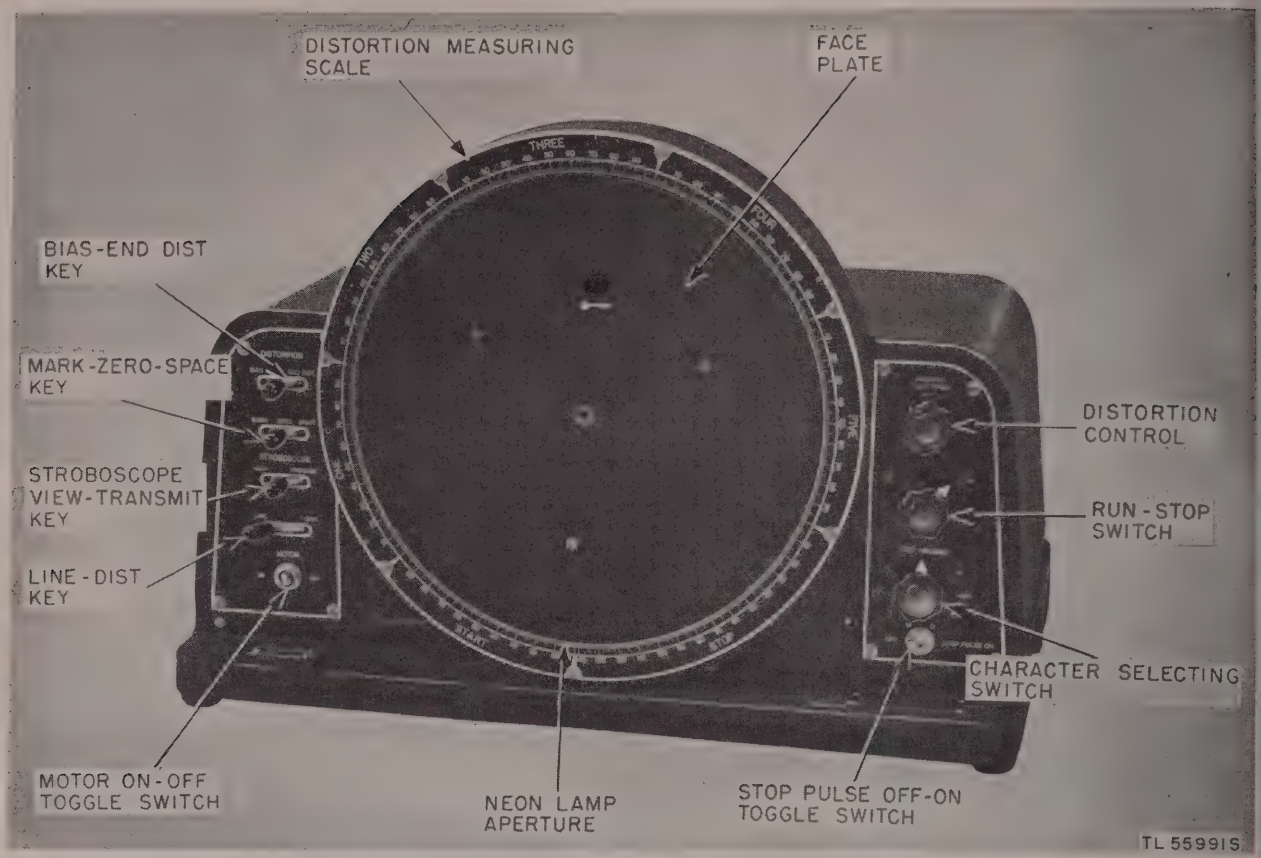

Figure 69. Distortion Test TS–383/GG.

be transmitted continuously by the test set. For a detailed description of this test set, see TM 11–2208.

130. Distortion Test Set TS–383/GG

Distortion Test Set TS–383/GG (fig. 69) is a motor-driven unit normally used in fifth echelon repair shops. In addition to the characters and functions transmitted by Test Set TS–2/TG, Distortion Test Set TS–383/GG will transmit the Y, T, O, M, V, and LETTERS characters and functions. These transmissions are sent either undistorted or with a controlled degree of distortion up to approximately 100 percent. Distortion Test Set TS–383/GG also is designed to receive and analyze distortion in the transmitting circuit of teletypewriter equipment. See TM 11–2217 for a complete description of this test set.

131. Test Set I–193–A

Test Set I–193–A (fig. 70) is a compact, portable unit which provides a means for testing and adjusting polar relays. Test Set I–193–A provides a source of opens and closures at a frequency of either 20 cycles or 10 cycles per second for lining up circuits. The test set provides a space for four-space polar relays. See TM 11–2513 for complete instructions for using Test Set I–193–A.

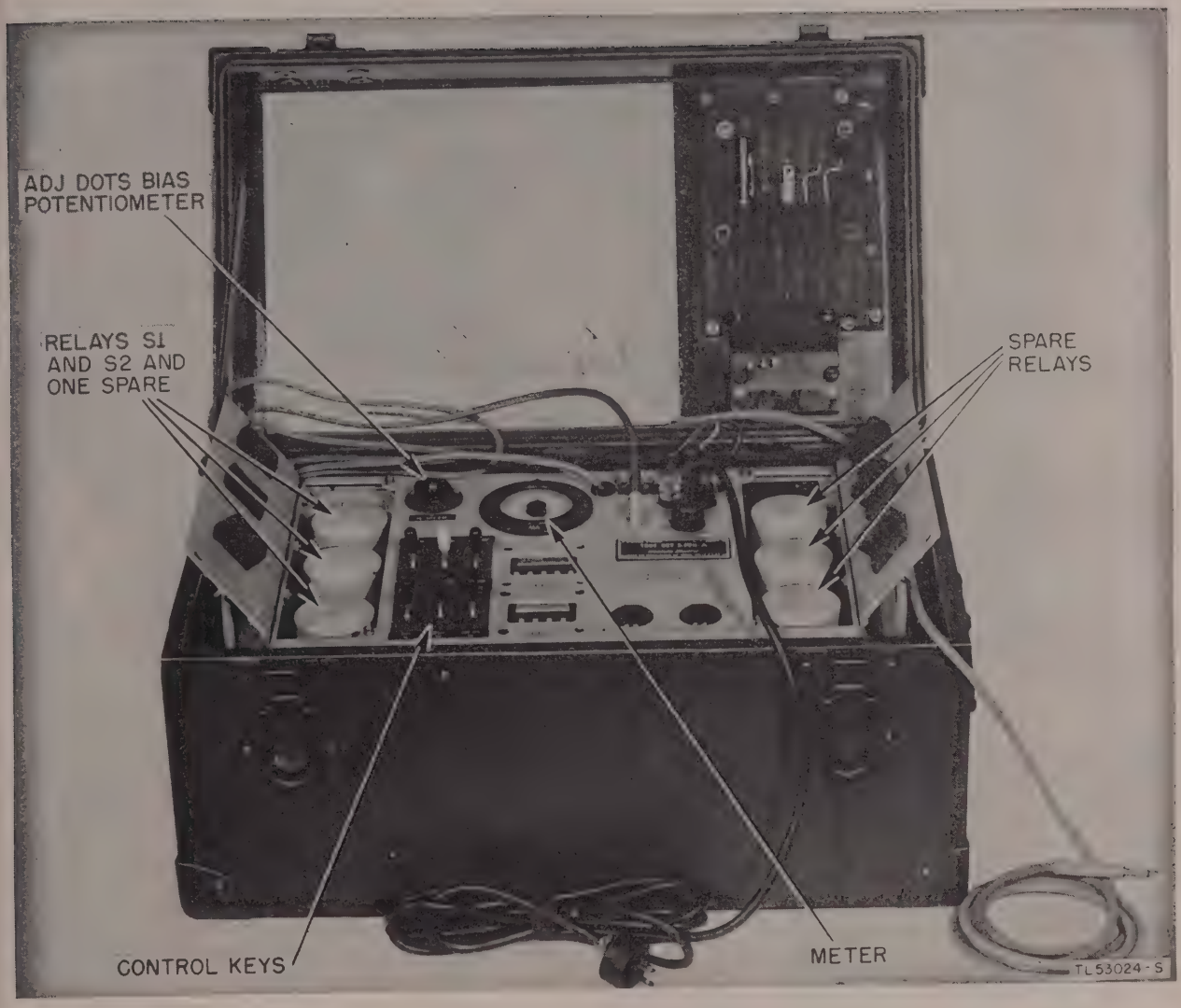

Figure 70. Test Set I–193–A.

Figure 71. Test Set I–181, cover removed.

132. Test Set I–181

Test Set I–181 (fig. 71) is a current-flow type relay-adjusting set. The primary purpose of the current-flow test set is to measure and control the amount of current flow through the winding of a relay, drop, or similar electromagnetic apparatus which is being tested or adjusted. Test Set I–181 also may be used as a d-c milliammeter over three meter scale ranges of 0–15 milliamperes, 0–75 milliamperes, and 0–150 milliamperes. For a detailed description of Test Set I–181, see TM 11–2036.

133. Additional Tools

a. General. The detailed repair instructions in section XVI refer to the use of certain tools which are not furnished as part of Tool Equipment TE–50. These additional tools, or their equivalent, usually are available in higher echelon maintenance kits intended for use where extensive teletypewriter repairs are completed. In some instances where the tools are not available, suitable substitutes may be improvised. See paragraph 66.

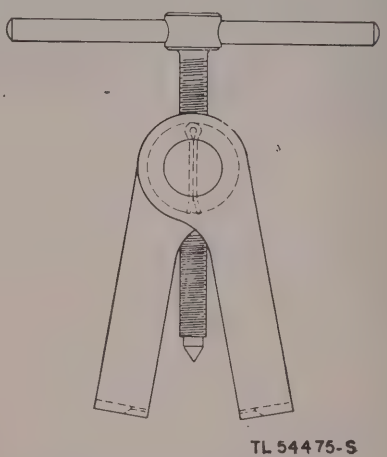

Figure 72. Bearing puller.

and figure 28 for a complete listing and illustration of the tools furnished in Tool Equipment TE–50. The additional tools are listed in *b* below.

b. List of Additional Tools. Figure 72 illustrates the bearing puller which is included among the additional tools referred to in the table below.

Signal Corps stock No.	Name of tool	Description
4T84020	Bearing puller	Designed for removing all types of teletypewriter motor armature bearings.
6R46290	Undercutter, mica	Designed for cutting commutator segments.
6R4774–6	Pliers, short-nose	Heavy, 6″ long, 1″ wide; for general use.
6R41140	No. 340 tool	Polarized relay armature gap adjuster.
6R41009	No. 209 shunt tool	Offset handle wrench for engaging hexagonal check nuts under key buttons on mechanical switching keys.

c. Drills, Taps, Dies, Clamps, Etc. A set of various sizes of drills (carbon or high-speed steel) and either a hand drill or an electrical drill should be available for making new parts or reworking old parts. A set of taps and dies for several common sizes of screws and bolts also should be available. Clamps may be any type of suitable size.

d. Welding and Brazing Equipment. In emergencies, many broken parts may be welded or brazed. However, this procedure is very difficult and will be performed only by personnel thoroughly skilled in welding and brazing techniques.

Caution: Welded or brazed parts must be properly alined and free of excessive build-ups which would reduce clearances below the minimum requirements.

134. Maintenance Parts for Teletypewriter Set AN/TGC–1

Maintenance parts for Teletypewriter Sets AN/TGC–1 and AN/TGC–1A are furnished in accordance with paragraph 1, appendix II. In addition, a maintenance parts kit (Sig C stock No. 4T1000–1/MP2) is available which contains units for a complete Teletypewriter Set AN/TGC–1 (except the console). The kit consists of two typing reperforator units, one multiple transmitter distributor, one tape-winder unit, one rectifier unit, one signal indicator panel, one relay control unit, and one unit containing miscellaneous spare equipment. Using the individual units from the kit as exchange replacements during repair of defective components will aid in maintaining uninterrupted service.

Section XV. TROUBLE SHOOTING

135. Introduction to Trouble Shooting

There are many factors to consider in locating trouble and, because of wide variations in the experience of personnel working with the equipment, it is not possible to lay down definite rules as to the exact procedure to be followed in trouble shooting. However, the charts and other information in this section are intended to provide both a step-by-step procedure for the inexperienced trouble shooter and a reference for the experienced trouble shooter. In all cases the origin of the trouble and the characteristics of the trouble reported will determine the procedure to be followed.

a. General. It will be found that troubles may be divided into two general classes:

(1) Troubles which are readily apparent or which, when reported, are definitely identified as being in a particular part or unit.

(2) Troubles which are not so readily apparent. The failure may be due to the failure of the teletypewriter set, a failure in other equipment, or failure in connecting facilities. In some cases these troubles may be intermittent and require extensive routine checks of all equipment and facilities before the trouble can be definitely located. The substitution of components of Teletypewriter Set AN/TGC–1 (or AN/TGC–1A) known to be in good condition is frequently the fastest method of proving whether or not the

trouble is in the teletypewriter set and which part of the circuit may be the source of the intermittent trouble.

b. Trouble Records. It will be found helpful to keep a record of troubles reported and the method of clearing them. In addition to being a record of equipment performance, trouble records may be found to be helpful to the trouble shooter as a reference in locating trouble and in prescribing a method of clearing the trouble. Trouble records will be retained at least 48 hours so that they will be available to maintenance personnel in the event of trouble recurrence.

136. Trouble Detected by Inspection

Trouble found during routine check of the equipment or while inspecting the equipment during a major overhaul usually will be definite in nature. In some cases, however, these troubles may require further analysis using the special testing equipment discussed in section XIV.

137. Trouble Analysis

a. Knowledge of Sequence of Operation. Thorough knowledge of the sequence of operation for each functioning element in the teletypewriter set is of fundamental importance in analyzing trouble. The trouble shooter must be able to prove quickly in what component of the teletypewriter set the trouble lies. The appearance of a particular operating failure may indicate immediately the exact location of the faulty adjustment or the damage; if not, it will be necessary to determine with exactness those functions which are operating properly and those which are failing.

b. Process of Elimination. By determining which of the transmitting, receiving, and common functions of the teletypewriter set do and which do not operate properly, the trouble shooter will eliminate the possibility of wasting considerable time and effort. By sending to and receiving from other teletypewriter equipment, the trouble may be proved to be in either the transmitting, receiving, or common functions. A local operating test circuit (described in par. 40) also may be used.

c. Trouble-Analysis Charts. Trouble-analysis charts (pars. 139 through 145) listing the most commonly observed faults are of considerable assistance in determining the best sequence and testing procedure for a particular condition.

d. Localizing Trouble. When it has been determined either by observation or testing which of the units or functions is causing the trouble, the next step is to isolate or localize the trouble in a particular electrical circuit or mechanical element.

138. Localization of Electrical Troubles

Electrical circuits in Teletypewriter Set AN/TGC–1 (or AN/TGC–1A) are provided with connecting terminals, plugs, and jacks at points where it will be necessary to connect or disconnect circuits or units. Do not disturb the wiring any more than necessary in testing and inspecting. The majority of electrical troubles will be found at contacts in switches and jacks or where the insulation on wire or between metal parts has been damaged. The repairman must be familiar with the use of schematic and wiring diagrams and must use them while making point-to-point checks of the circuits of the teletypewriter set. See figures 127 through 132 for detailed schematic diagrams.

139. Signal Indicator Panel Trouble-Analysis Chart

a. Number is not transmitted to receiving (lower) typing reperforator.

Item No.	Item to be checked	Possible trouble	Corrective measures	References
1	NUMBER RELEASE key	NUMBER RELEASE key contacts.	Bend to proper clearance	Par. 109*a*.
2	Relay RN	Dirty contacts	Clean and adjust	Pars. 98, 158, 220.
3	Number transmitter unit	Dirty transmitting contacts	Clean and adjust	Pars. 115, 116.
		Mechanical malfunctioning	Adjust to meet specified requirements.	Section XVII.
4	Receiving (lower) typing reperforator.			TM 11–2223.

b. Alarm lamp does not light when distant station calls in.

Item No.	Item to be checked	Possible trouble	Corrective measures	References
5	Alarm lamp	Burned out	Replace.	
6	Alarm switch (ALARM OFF) (Button Out).	Alarm switch in OFF position	Position alarm switch to ON.	Par. 109*c*.
7	Relay RC	Dirty contacts	Clean and adjust	Pars. 106, 158, 220.
8	REC–1 and REC–2 relays	Dirty contacts	Clean and adjust	Pars. 156, 157, 219.

c. Tape does not feed out of typing reperforators when feed-out keys FO–1 and FO–2 are depressed.

Item No.	Item to be checked	Possible trouble	Corrective measures	References
9	Feed-out keys FO–1 and FO–2	Dirty contacts	Clean and adjust	Pars. 103, 104, 109*d*.
10	Relay RR1	*a.* If depressing FO–1 key: check relay RR1/1–2 for dirty contacts.	Clean and adjust	Pars. 158, 220.
		b. If depressing FO–2 key: check relay RR/23–24 for dirty contacts.	Clean and adjust	Pars. 158, 220.
11	GND	Broken lead at relay RR2–24	Resolder	

d. When RELEASE KEY is depressed the red break light does not go out.

Item No.	Item to be checked	Possible trouble	Corrective measures	References
12	RELEASE KEY	Contacts do not open	Bend to proper clearance	Pars. 104, 107, 109*e*.
13	Relay RR2	RR2 contacts 24 and 25 do not open.	Adjust	Pars. 104, 158, 220.

e. No break signal is sent out when BREAK KEY is depressed.

Item No.	Item to be checked	Possible trouble	Corrective measures	References
14	BREAK KEY	BREAK KEY contacts do not open.	Bend to proper clearance	Pars. 102, 109*g*.
		BREAK KEY contacts are shorted out.	Remove short	
15	Relay RBK1	Dirty contacts	Clean and adjust	Pars 107, 158, 220.

f. Signal indicator controls keys do not function.

Item No.	Item to be checked	Possible trouble	Corrective measures	References
16	Jones plug	Jones plug does not make good contact.	Seat plug properly and lock in place; if plug will not seat properly, check that prongs are not bent.	Par. 22*h*.
17	Wiring to control keys	Broken connections	Resolder	Par. 109.

140. Monitor (Upper) Typing Reperforator Trouble-Analysis Chart

For detailed information on trouble shooting, see TM 11–2223.

141. Tape Winder Trouble-Analysis Chart

a. Tape-winder motor does not run.

Item No.	Item to be checked	Possible trouble	Corrective measures	References
1	Power	Power cord disconnected or not making good contact.	Plug in power cord	Par. 22*g*, fig. 120.
2	Motor	Carbon brushes	Replace	Par. 150, fig. 120.
3	Toggle switch	Broken connections	Resolder	

b. Tape does not wind on take-up reel of tape winder.

Item No.	Item to be checked	Possible trouble	Corrective measures	References
4	Take-up reel	Take-up reel slips on its shaft	Tighten setscrews	Par. 163.
5	1-to-1 ratio driving and driven gears.	Bind	Adjust gears to proper clearance.	Par. 163.

c. Tape-winder lamp does not run.

Item No.	Item to be checked	Possible trouble	Corrective measures	References
6	Power	Power cord disconnected or not making good contact.	Plug in power cord	Par. 22*g*, fig. 120.
7	Toggle switch	Broken connections	Resolder	
8	Tape-winder lamp	Burned out	Replace	

142. Receiving (Lower) Typing Reperforator Trouble-Analysis Chart

For detailed information on trouble shooting, see TM 11–2223.

143. 54A Rectifier Trouble-Analysis Chart

No (or low) direct current.

Item No.	Item to be checked	Possible trouble	Corrective measures	References
1	D-c power cord	Open power cord	Replace	
		Short-circuited power cord	Replace	
		Loose wiring connections at rectifier d-c outlet receptacle.	Tighten	Fig. 20.
2	Transformer	Burned-out transformer	Replace	Par. 152, figs. 21, 121.
3	Capacitors and choke coil	A-c ripple in d-c output	Replace	Figs. 20, 121.
4	Transformer tap settings	High (or low) d-c output voltage.	Change tap settings	Par. 113, fig. 121.
5	A-c power cord	Open power cord	Replace	
		Cord not plugged in properly	Plug in power cord	Par. 22*d*.
		Short-circuited power cord	Replace	
		Loose terminal connections at rectifier a-c outlet receptacle.	Tighten	Fig. 20.

144. Multiple Transmitter Distributor and Base Trouble-Analysis Chart

a. Motor does not run.

Item No.	Item to be checked	Possible trouble	Corrective measures	References
1	Power switch	Switch in OFF position	Throw to ON	
2	Power cord	*a.* Open or short-circuited power cord.	*a.* Replace	
		b. Cord not plugged in properly.	*b.* Plug in power cord	Par. 22*b*.
3	Transmitter power outlet	Loose wiring connections	Tighten	
4	Fuse, motor circuit	Fuse blown or missing	Replace with good fuse	Figs. 117, 125.
5	Motor	For trouble in motor, see TM 11–2223.		

b. Multiple transmitter distributor does not transmit.

Item No.	Item to be checked	Possible trouble	Corrective measures	References
6	Signal cord	Open or short-circuited signal cord.	Replace	Par. 22*c*.
7	Signal plug	Does not make good contact	Seat properly	Par. 22*c*.
8	Transmitting contacts	Dirty contacts	Clean and adjust	Par. 115, section XIX.
9	Wiring	Improper wiring at terminals	Wire according to applicable wiring diagrams.	Figs. 122, 123.
10	Transmitting relays	Dirty contacts	Clean and adjust	Pars. 123, 156, 157, 165.
11	Clutch throw-out lever	Holds driving and driven members of clutch shaft out of engagement.	Adjust	Par. 115, section XVII.
12	Start lever MB	Dirty contacts	Clean and adjust	Par. 115*g*, section XVII.
13	Control relays RA or RB, and RBK2.	Dirty contacts	Clean and adjust	Pars. 158, 220.
14	Monitor (upper) typing reperforator.			TM 11–2223.

c. Multiple transmitter distributor transmits occasional errors.

Item No.	Item to be checked	Possible trouble	Corrective measures	References
15	Line current	Too low or too high	Adjust line current	Section VI.
16	Transmitting contacts	Contacts dirty or improperly adjusted.	Clean and adjust	Par. 115, section XVII.
17	Motor speed:			
	a. Too high	(1) Shorted resistor in governor.	(1) (*a*) Clean and adjust governor contacts.	Section XVII.
			(*b*) Check contact arm spring tension.	Section XVII.
		(2) Governor out of adjustment.	(2) Check speed with tuning fork, and adjust.	TM 11–2223.
	b. Too low	(1) Governor adjustment contacts burned.	(1) Replace contacts	Section XVII.
		(2) Governor out of adjustment.	(2) Check speed with tuning fork, and adjust.	TM 11–2223.
		(3) Excessive main-shaft friction clutch drag.	(3) Clean and lubricate, or replace, main-shaft gears and clutches.	Section XVII.
18	Clutch throw-out lever	Out of adjustment	Adjust	Section XVII.

145. Equipment Drawer Trouble-Analysis Chart

Item No.	Item to be inspected or checked	Normal action	Possible trouble	Corrective measures	References
1	NORMAL SPLIT switch (SA).	Changes teletypewriter set from working two external circuits to working four external circuits and vice versa.	*a.* Dirty rotary switch contacts. *b.* Broken contacts *c.* Incorrect line terminal strip connections.	*a.* Clean *b.* Replace *c.* Correct connections as per figure 25.	Par. 119.
2	DUPLEX SINGLE switch (SB).	Changes teletypewriter set from duplex to single operation and vice versa.	*a.* Dirty rotary switch contacts. *b.* Broken contacts *c.* Incorrect line terminal strip connections.	*a.* Clean *b.* Replace *c.* Correct connections as per figure 25.	Par. 120.
3	OPR. NON-OPR. switches (S1 and S2).	Removes ground from tongues of relays REC–1 and REC–2 respectively.	*a.* Dirty contacts *b.* Broken contacts	*a.* Clean *b.* Replace	Par. 121.
4	POLAR MAKE-BREAK switches (S3 and S4):				
	a. POLAR position	Center-tapped resistors are batteried to provide a return point for the polar signals from the transmitting relays.	*a.* Switch in wrong position. *b.* Broken contacts. *c.* Incorrect line terminal strip connections.	*a.* Check switch is at POLAR. *b.* Replace. *c.* Correct connections as per figure 25.	Par. 122.
	b. MAKE-BREAK position.	Center-tapped resistors are disconnected and the bias winding of relays REC–1 and REC–2 are batteried.	*a.* Switch in wrong position. *b.* Broken resistor contacts. *c.* Incorrect line terminal strip connections.	*a.* Check switch is at MAKE-BREAK. *b.* Replace *c.* Correct connections as per figure 25.	
5	Type 255A transmitting and receiving relays:				Pars. 123, 156, 158, 219.
	a. Receiving relays REC–1 and REC–2.	NORMAL operation	Switch in wrong position.	Check NORMAL SPLIT switch is at NORMAL.	
		a. REC–1 controls the monitor (upper) typing reperforator.	Dirty contacts	Clean and adjust	
		b. REC–2 controls the receiving (lower) typing reperforator.	Dirty contacts	Clean and adjust	
		SPLIT operation	Switch in wrong position.	Check NORMAL SPLIT switch is at SPLIT.	
		a. REC–1 controls the receiving (lower) typing reperforator.	Dirty contacts	Clean and adjust	
		b. REC–2 controls the receiving (lower) typing reperforator.	Dirty contacts	Clean and adjust	
	b. Transmitting relays A and B.	NORMAL operation	*a.* Switch in wrong position.	*a.* Check NORMAL SPLIT switch is at NORMAL.	
		B transmitting relay is operated by all transmitter units.	*b.* Dirty contacts *c.* Open BREAK KEY contacts.	*b.* Clean and adjust *c.* Bend to proper clearance.	

Item No.	Item to be inspected or checked	Normal action	Possible trouble	Corrective measures	References
			d. Open jack contacts (MJ–3 and MJ–4).	*d.* Adjust.	
		SPLIT operation	*a.* (1) Switch in wrong position.	*a.* (1) Check NORMAL SPLIT switch is at SPLIT.	
		a. A transmitting relay is operated by the number and A transmitter units.	(2) Dirty contacts	(2) Clean and adjust.	
			(3) Open jack contacts (MJ–3).	(3) Adjust.	
		b. B transmitting relay is operated by the B transmitter unit.	*b.* (1) Switch in wrong position.	*b.* (1) Check NORMAL SPLIT switch is at SPLIT.	
			(2) Dirty contacts	(2) Clean and adjust.	
			(3) Open BREAK KEY contacts.	(3) Bend to proper clearance.	
			(4) Open jack contacts (MJ–4).	(4) Adjust	
6	Transmitter control relays RA, RB, RN, and RNN.	This group of relays controls the operation of transmitter units. See section XIII for detailed information on sequence of operations.	Relays out of adjustment.	Adjust	Pars. 124, 158, 220.
7	Feed-out control relays RR1 and RR2.	Operate in conjunction with feed-out keys FO–1 and FO–2 to control feeding out of tape from typing reperforators.	*a.* Open feed-out key contacts.	*a.* Adjust	Pars. 125, 158, 160.
			b. Dirty relay contacts.	*b.* Clean and adjust	
8	Break relays RBK1 and RBK2 and call-in relay RC.	Operate when break signal is received from the line. For detailed information on sequence of operation, see section XIII.	Dirty contacts	Clean and adjust	Pars. 126, 152, 160.
9	Resistors	To limit flow of current and provide voltage drop.	Resistors may be shorted.	Check continuity of circuit.	Figs. 19, 124, 127.
10	Fuses	Protect circuits from current overloads.	Blown	Replace	Figs. 117, 122.
11	Wiring		*a.* Broken wires	*a.* Solder	Fig. 124.
			b. Worn insulation	*b.* Replace	

Section XVI. REPAIR

146. General Repair Information

a. This section describes the recommended procedure for repairing and replacing defective apparatus and does not duplicate information on preventive maintenance procedure furnished in part three. This section is not intended as a complete shop guide listing every possible operation involved in dismantling, cleaning, inspecting, repairing, reassembling, and adjusting a complete teletypewriter set. The procedures included are intended to prescribe the operations involved in replacing and repairing those parts, assemblies, and units subject to the greatest amount of wear. Because of variations in service needs and in repair and supply facilities available, definite rules cannot be laid down specifying exactly which parts, assemblies, or units will be repaired and which will be replaced.

b. Except in cases of extreme emergency all repairs to teletypewriter sets will be completed by personnel thoroughly trained in teletypewriter maintenance. *It is as important to know what not to do as what to do when making teletypewriter*

equipment repairs. Equipment operating with minor faults may fail completely as a result of efforts by inexperienced personnel to correct what apparently are simple defects.

c. Inspecting, cleaning, and lubricating while making repairs will be performed in accordance with procedures described in part three and additional instructions in this section. All adjustments will be completed in accordance with the detailed requirements and adjustments in section XVII.

d. Instructions for repairs and replacements are arranged by assembly or unit.

147. Signal Indicator Panel

a. Disassembly. Remove the two screws that hold the signal indicator panel to the main console. Slip the signal indicator panel forward.

b. Repairs. In general, the only repairs that will be necessary on the signal indicator panel are the replacing of switches, keys, and lamps or soldering broken wires to the switches, keys, and lamps.

c. Reassembly. Mount the signal indicator panel to the main console by means of the two screws provided.

148. Monitor (Upper) Typing Reperforator and Motor

For repair information on the monitor (upper) typing reperforator, see TM 11–2223.

149. Tape Winder

a. Disassembly.

(1) Remove the two nuts and bolts that fasten the unit to the shelf and place the unit on the bench.

(2) Remove the tape reel.

(3) Remove the top cover plate of the 1-to-1 gear box by unscrewing the four screws which secure it to the case.

(4) Remove the bearing end cap plate by unscrewing the three retaining screws.

(5) Loosen the setscrew in the half of the coupling on the end of the clutch shaft. Hold the clutch shaft from turning by means of a screw driver placed in the slotted end of the shaft, and remove the coupling with a twisting motion if it does not readily slide off. Remove the complete clutch shaft assembly from the gear case, taking care not to lose the thrust washers.

(6) Disassemble the clutch shaft assembly by loosening the setscrew in the collar. The clutch assembly with the exception of the tension nut will then slide free of the shaft.

(7) Remove the tape-reel shaft by loosening the setscrews in the gear hub and the collar; then slide the shaft out the reel end of the casing.

b. Repairs. Repairs for the tape winder will consist of replacing broken or worn parts.

c. Reassembly. Reassemble in the reverse order that the tape winder was disassembled.

150. Tape-Winder Motor Unit

a. Disassembly. Disassemble the tape-winder motor as described in paragraph 85*c* (1) through (5).

b. Repairs. Repairs for the tape-winder motor will consist of resurfacing the motor armature and replacing motor brushes, armature bearings, and other worn parts. Remove the motor brushes only when necessary. Clean the brushes and the inside of the brush holders with a cloth moistened with dry-cleaning solvent (SD). During this operation check the condition of the carbon brushes.

Note. Scratch an identifying mark on the upper surface of each carbon brush upon its removal in order to facilitate replacing the brush into its proper brush holder after cleaning. Replace brushes only when it is evident that they will not last until the next scheduled routine.

c. Reassembly. Reassemble the tape-winder motor in the reverse order that it was disassembled.

151. Receiving (Lower) Typing Reperforator and Motor

For repair information on the receiving (lower) typing reperforator, see TM 11–2223.

152. 54A Rectifier

a. Disassembly.

(1) Remove the rectifier cover by unscrewing the screws holding it to the rectifier chassis.

(2) Unsolder the connections to the transformer, inductor, and capacitors; take

note of their positions so that they may be resoldered to the correct terminals.

(3) Remove the four screws and the nipple screw that holds the rectifier cords to the chassis and remove the cords.

(4) Remove the transformer by unscrewing the four screws that hold it to the bottom of the rectifier chassis.

(5) Remove the selenium stack by unscrewing the two screws that hold the selenium stack bracket to the bottom of the chassis and by removing the nut which holds the other end of the selenium stack to the rear of the chassis.

(6) Remove the inductor by unscrewing the four screws that hold it to the bottom of the chassis.

(7) Remove the two capacitors by removing the four screws which hold the capacitors in place.

b. Repairs. Repairs on the rectifier will consist of soldering broken leads to the transformer, inductor, and capacitors or the replacement of parts.

c. Reassembly. Reassembly of the 54A rectifier is in the reverse order that it was disassembled.

153. Multiple Transmitter Distributor and Base

a Disconnect power and line cords from the console unit and place the multiple transmitter distributor on a bench or other suitable place.

b. Remove the card-holder bracket from the front of the unit by loosening the two knurled nuts.

c. Remove the motor cover and the distributor cover and side plates (do not remove the screws that secure the top plates of the individual transmitter distributors) by unscrewing the retaining screws.

d. Remove the motor unit from the base casting by disconnecting the three wires from the motor unit at the terminal block, and remove the governor adjusting bracket. Remove the four screws which mount the two motor plates to the base casting and remove the motor unit by lowering through the base casting. For further disassembly of the motor, see TM 11–2223.

e. Remove the individual transmitter units by removing the mounting screws that secure the unit to the base. Loosen the screws on the terminal strip and disconnect the individual transmitter unit leads, taking note of their positions. Remove the two front screws and just loosen the rear screw. Slide the transmitter unit toward the front to clear the rear mounting screw.

f. Remove the cam felt oil-wick mounting bracket by unscrewing the mounting-bracket screw on the side of the unit.

g. Disconnect the tape-out operating-lever spring and the selector-lever bail spring. Remove the two screws that fasten the contact bracket to the bottom plate. Access to these screws is from the under side of the bottom plate. Swing the contact bracket and assembly free, taking care not to put stress on the connecting wires.

h. Remove the bottom plate by removing the top-plate screw that secures the post to which the filter assembly is fastened. Disconnect the feed-pawl spring, release-bar spring, and the armature spring. Turn the unit bottom-side up and remove the screws which fasten the side frames to the bottom plate. Remove the screw that fastens the post to the bottom plate (do not remove the screw which fastens the post to which the filter is attached). Carefully ease top and bottom sections apart. All of the wiring will be located on the bottom section and most of the mechanical parts will be located on the top section.

i. The transmitting shaft of the individual transmitter units is located in the top section. To dismantle the transmitting shaft, remove the driving clutch screw and pull the transmitting shaft out by the gear end. Be careful that parts are not lost as the individual parts will fall off as the shaft passes through and releases them. It is a good practice to place the individual parts on a sheet of paper as the shaft is removed, to prevent loss of parts and excess loss of time in reassembling the shaft.

154. Repairing Multiple Transmitter Distributor and Base

a. Repairs for the multiple transmitter distributor consist mainly of replacing broken and worn parts.

b. For detailed information on the repair of the motor unit on the multiple transmitter distributor base, see TM 11–2223.

c. Through actual experience it has been found that the greatest amount of trouble will be found in those parts which are actuated when the transmitter start lever (MB) is depressed.

155. Reassembly of Multiple Transmitter Distributor and Base

Reassemble the multiple transmitter distributor and base in the reverse order that it was disassembled.

156. Cleaning and Adjusting 255A Type Relays

a. General. If a relay is found to be causing trouble or if preventive maintenance operations show that the relay should be cleaned or readjusted (par. 70), remove it from its operating position for repair. After inspecting and cleaning, readjust the relay according to paragraph 157 if Test Set I–193–A is not available. If Test Set I–193–A is available, follow the instructions in TM 11–2513.

b. Inspection of Relay Contacts. Inspect the relay contacts in a good light.

(1) If the contacts appear black or burned or have a sooty deposit, replace the relay with a spare (if a spare is available). As described in *c* below, clean and readjust the relay taken from the equipment and check the adjustment as described in paragraph 157.

(2) If on examination the contacts do not appear black or burned, make a further check for contact build-ups by holding the armature lightly against one contact and checking to determine that the 0.003-inch blade of the No. 74D gage will pass easily between the armature and the other contact. Repeat for the other contact gap. If the 0.003-inch blade passes easily through the contact gap, check that the contact gap is not too wide by holding the armature lightly against one contact and checking to determine that the 0.005-inch blade of the No. 74D gage will not pass through the gap easily. Repeat for the other contact. If a gap wider than 0.005 inch is found, the relay requires cleaning and readjusting in accordance with *c* below.

c. Cleaning. When inspection indicates need for cleaning a 255A type relay, back off the contact screws sufficiently to permit a No. KS–2663 file to enter easily between the contact and armature. Insert an orange stick between the contact springs. To avoid damage to the springs, avoid inserting the stick far enough to bend the springs. Insert a No. KS–2663 file parallel to the axis of the armature. The use of the orange stick and the file or burnisher is shown in figure 73. The file should be used in the same manner as the burnisher shown in figure 73.

(1) File the armature contact, being careful to move the file in and out parallel to the axis of the armature. The contacts of the armature are of moderately soft alloy. Therefore it is necessary to avoid excessive filing so that no more material will be removed from the contacts than is absolutely necessary. Move the file several strokes and then examine the contacts to determine if the pit has been removed, before again applying the file. After filing, burnish the contacts with burnisher No. 265C as shown in figure 73. Do not handle the burnisher with the fingers. Before using the burnisher blade, be sure to clean it with a clean, lint-free cloth moistened with solvent (SD). Move the blade of the burnisher in and out parallel to the axis of the armature.

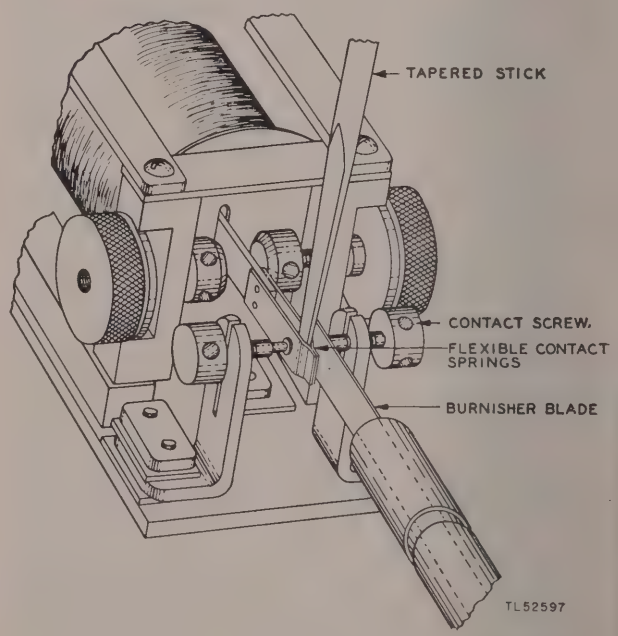

Figure 73. Use of orange stick, file, or burnisher.

(2) Clean the pole-piece surfaces. With the fingers loosen the knurled tension nuts on

the pole screws of the 255A type relay. Insert the blade of a screw driver (No. KS–6854) in the pole-screw slot and turn the screw driver counterclockwise to back off each pole screw as far as it will go. Remove any foreign matter on each pole screw by pressing friction tape lightly against the pole screw. The friction tape may be applied conveniently if it is wrapped around the flattened end of an orange stick. Use the same piece of friction tape only once and do not rub the pole screws with the friction tape.

(3) Clean the relay cover. Invert the relay cover and tap the closed end to loosen dirt. Wipe the cover with a dry, lint-free cloth.

157. Readjustment of 255A Type Relays

Turn both contact screws with the No. 340 tool in the direction which moves the contact screws away from the armature; loosen the knurled tension nuts with the fingers and back off the pole screw on each side as far as each pole screw will go.

a. Remove the armature and check that the armature is straight.

b. The tips of the flexible contact springs should be approximately flat, should bear upon each other at the top and bottom edges, and should make at least a line contact for at least 25 percent of the distance across the 3/16-inch width. Gage by eye. If the tips of the flexible contact springs do not rest against each other properly, back off the contact screws with the No. 340 tool and adjust the tips of the springs as required, using the No. 363 spring adjuster.

c. Reset the contact screws to meet contact travel requirements. To adjust the contact travel, loosen the locknuts or clamping screws, if provided, and back off the pole-piece screws as far as possible. Use the 3-inch cabinet screw driver to loosen the clamping screws and the No. 340 tool on the locknuts and pole-piece screws. Back off each contact screw with the No. 340 tool so that the screw does not touch the armature. Advance one contact screw until it just touches the armature and then back it off one-half the specified total contact travel. One-twelfth of a turn of the contact screw (approximately one-third the distance between hole centers in the head of the contact screw) corresponds to approximately 0.002-inch contact travel. Repeat this operation with the other contact screw. Check that with the armature in its normal mechanical position it does not make contact with either contact screw but stands approximately midway between the contact points. With the No. 74D gage, check that the total contact travel is within the specified limits. Then set the pole-piece screws.

d. Pole-piece screws will be sufficiently tight in the pole piece to insure their holding any adjusted position unless locknuts or clamping screws are provided, in which case the locknuts or clamping screws will be sufficiently tight to hold the pole-piece screws in any adjusted position. Gage by feel. Do not tighten clamping screws with excessive pressure of the screw driver after adjustment of pole-piece screws as this may destroy the adjustment.

158. Cleaning and Adjusting Relays RA, RB, RR1, RR2, RC, RN, RNN, RBK1, RBK2

a. General. It is essential that relay parts and contacts be kept clean, since failure of a circuit often may be traced to particles of dirt or lint between contacts or to dirty parts of a relay. Covers are provided to reduce, as far as possible, the entry and accumulation of foreign matter to the working parts of relays. It is important that relay covers be kept in place except when necessary to remove them for maintenance purposes. When covers are replaced on relays, replace them correctly so that they will fit snugly to prevent the entry of any foreign matter.

b. Testing Contacts. If there is evidence that a relay contact is not properly closed, this condition may be checked by bridging a current-flow test set, Test Set I–181, across the springs of the contact through which current is flowing. Absence of clicks or fluttering in the test receiver is evidence of a satisfactory contact. If the contact is unsatisfactory and on inspection it is found to be in mechanical adjustment, burnish the contact as described in *c* below. For detailed information on Test Set I–181, see TM 11–2036.

c. Contact Burnishing. When necessary to clean the contacts, burnish them with a clean No. 266 blade of the No. 265C contact burnisher. Meticulous cleanliness of the burnishing tools and of the thickness gages is very important when cleaning and adjusting relays. Wipe off the blade of

the contact burnisher and the thickness gages with a clean, dry cloth before placing them against each contact and frequently wipe them with a clean cloth dampened with solvent (SD).

(1) In burnishing normally open contacts, place the blade of the burnisher between the contacts and operate the relay manually to give a slight pressure against the blade of the burnisher. At the same time move the blade back and forth. The desired result usually is obtained by rubbing the burnisher between the contacts two or three times. In the case of normally closed contacts, the tensions of the springs themselves usually will furnish sufficient pressure against the burnisher. On springs having heavy tension, lift one of the springs away when inserting the burnisher.

(2) To burnish contacts, back off the contact screws an equal amount and far enough to permit the flat blade of the No. 265C contact burnisher to enter easily between the armature and the contact. This will facilitate burnishing the contacts on the armature and contact screws at the proper angle. Insert a clean blade of the contact burnisher horizontally between the armature and the stationary contact. Hold the armature or flexible contact against the contact burnisher and proceed to burnish the contacts. While rubbing the burnisher back and forth take care to hold it parallel to the armature. Continue the operation until the contacts on both sides of the armature are clean as determined by visual inspection. Do not produce a convex surface on the stationary contact.

159. Teletypewriter Sets AN/TGC–1 and AN/TGC–1A, Modifications

a. As explained in paragraph 1*b*, the main difference between Teletypewriter Sets AN/TGC–1 and AN/TGC–1A is that the AN/TGC–1A contains an electrical circuit which will permit its operation at 600 opm if the proper mechanical changes are made. Without these mechanical changes being made, the AN/TGC–1A will operate at 368.1 opm. To have the AN/TGC–1 operate at 600 opm, both the electrical and mechanical changes must be made.

b. The electrical changes which must be made to the AN/TGC–1 are illustrated in figure 74. The modification is made electrically by the addition of one 2-mf (microfarad) capacitor across 1,500-ohm resistor R10 in battery supply 5 and one 2-mf capacitor across 1,500-ohm resistor R9 in battery supply 8. The physical location of the capacitors is illustrated in figure 75.

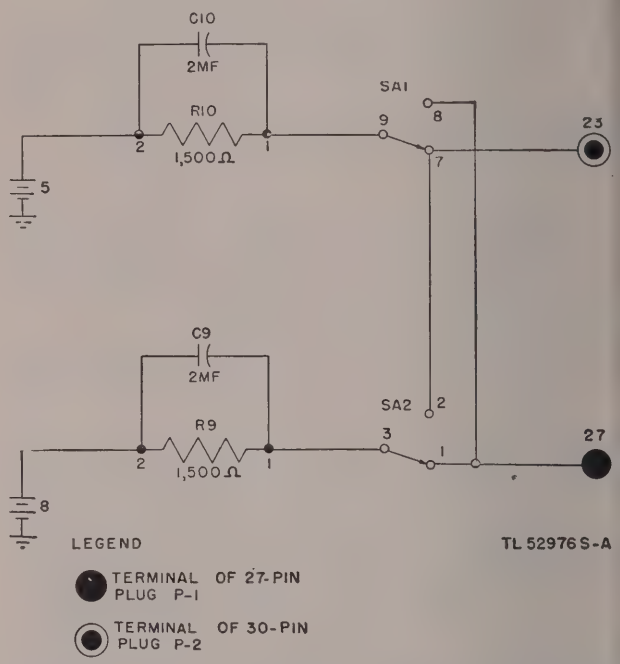

Figure 74. Circuit modifications required to change Teletypewriter Set AN/TGC–1 to Teletypewriter Set AN/TGC–1A operating at 600 opm.

c. The mechanical changes which must be made in modifying either the AN/TGC–1 or the AN/TGC–1A are illustrated in figures 76 through 79. The parts added or deleted in the teletypewriter set so that it will operate at 600 opm, and the approximate sequence of removal and addition of parts, are given in the following lists. For example, when the 6893 backstop bracket is removed there will be some play and therefore the 7002 washer is added; the 74059 screw is removed and is replaced by the 74896 screw; and so on.

(1) *Typing reperforator.*

Delete—		Add—	
Part No.	Part	Part No.	Part
6893	Backstop bracket	7002	Washer.
74059	Screw	74986	Screw.
		98479	Guard.
		103341	Backstop bracket.
6841	Main-bail cam	101436	Main-bail cam.
6993	Spring	110878	Clutch spring.
72884	Disk	11686	Friction disk.
97297	Handle	3438	Washer.
2669	Lockwasher	3598	Nut.
		76099	Washer.
		78028	Screw.
		204372	Selector-magnet support.
		3DB2.602	2-mf capacitor (2 required; see *b* above).
6884	Bracket		
8508	Armature	204382	Armature.
		204384	Armature bracket.
		204644	Selector spring mounting bracket.
		204645	Selector spring extension arm.
71974	Pinion	110881	Pinion.
73106	Gear	110882	Gear.

(2) *Multiple transmitter distributor and base.*

Delete—		Add—	
Part No.	Part	Part No.	Part
2836	Spring	111342	Armature spring.
1026	Screw		
1164	Screw		
2191	Lockwasher		
99115	Bracket		
99116	Retainer		
99117	Lubricator felt		
55090	Spring	76379	Feed-pawl spring.
		72563	Felt washer.
		5740	Screw.
		34–11	Nut.
		2504	Insulator.
		112048	Stiffener (short).
2503	Cover plate	112497	Cover plate.
2529	Bushing, bakelite	112498	Screw.
6811	Screw	112499	Bushing.
		204370	Stiffener (long).
		109359	Bushing.
110650	Pinion	111264	Pinion.
110651	Gear	111265	Gear.

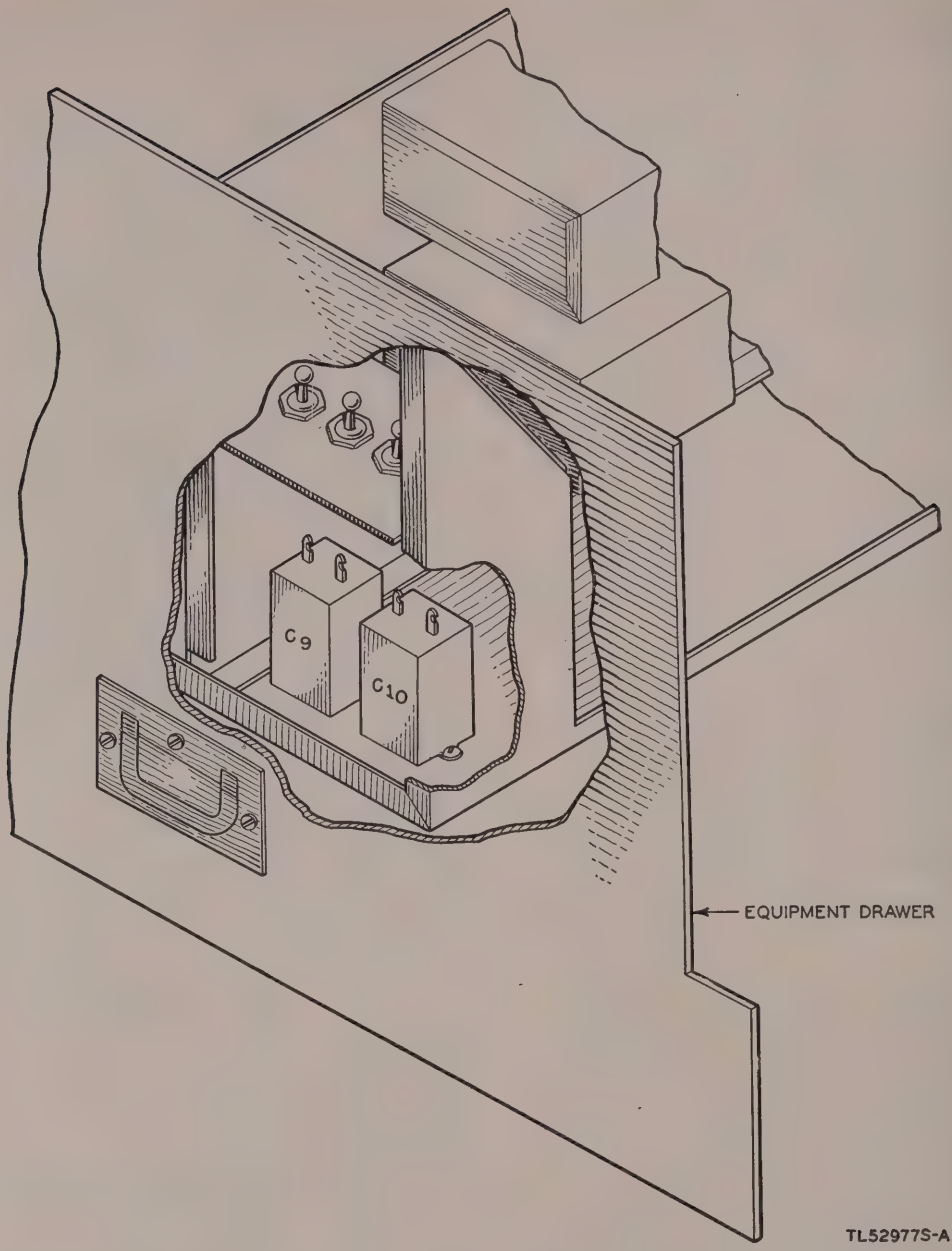

Figure 75. Physical location of capacitors added in modifying teletypewriter set circuit for 600 opm.

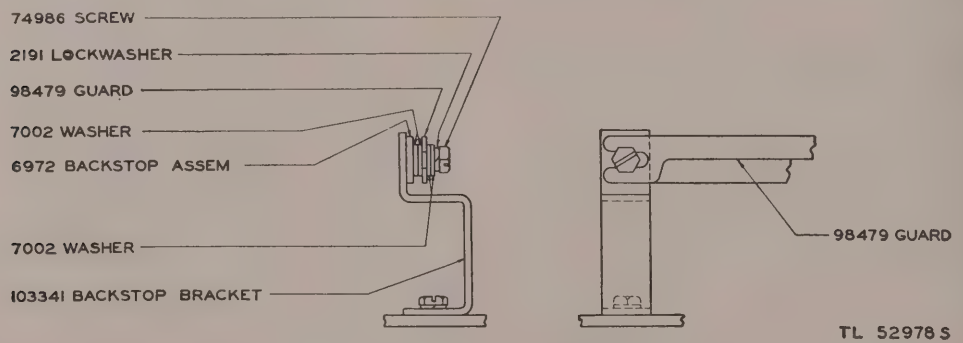

Figure 76. Type-bar backstop parts.

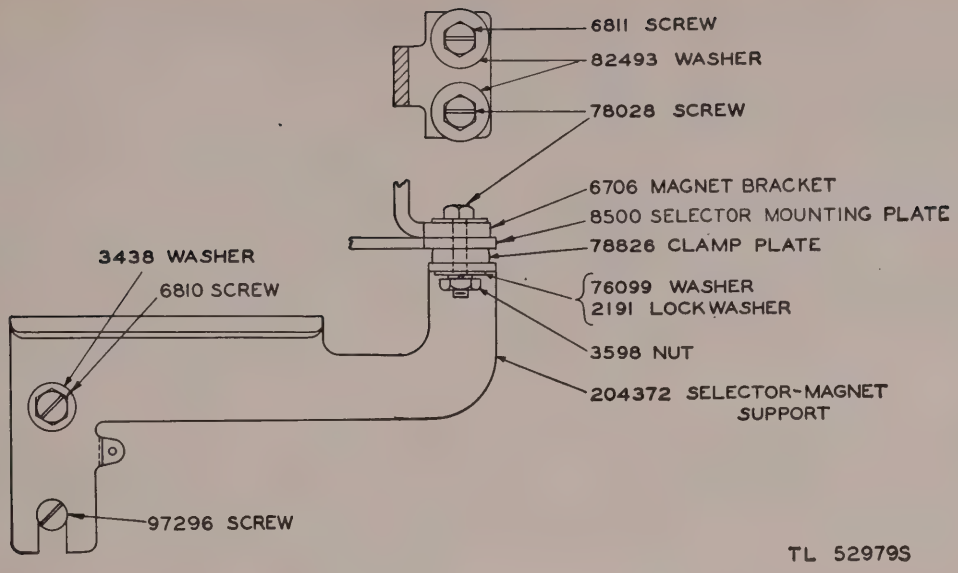

Figure 77. Selector-magnet support parts.

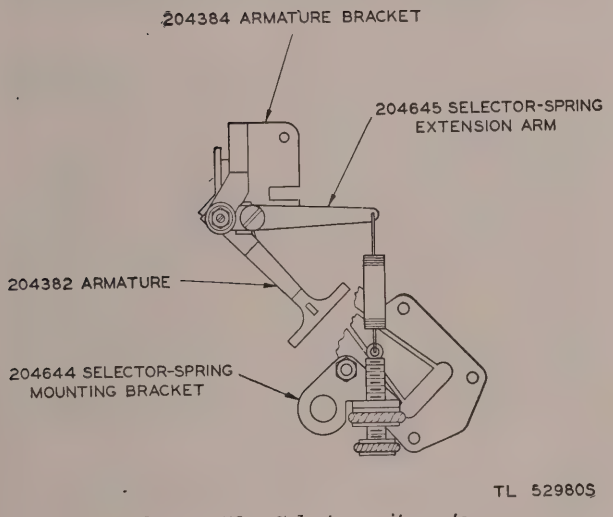

Figure 78. Selector-unit parts.

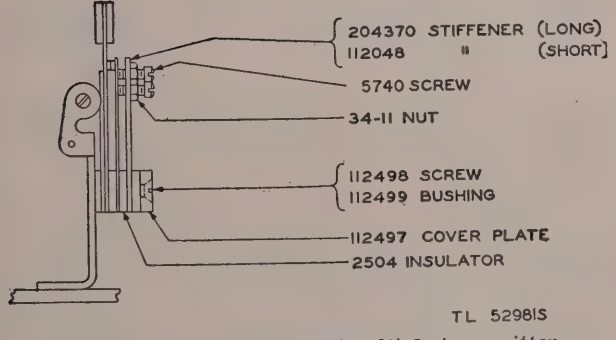

Figure 79. Contact parts (multiple transmitter distributor).

d. Diehl motors were used in tape-winder units of early models of Teletypewriter Sets AN/TGC–1 and AN/TGC–1A. Barber-Colman motors are used in tape-winder units of later models of the teletypewriter sets. The Barber-Colman motors are type PYAZ 443 and are rated at 110 volts, 60 cycles, 20 r. p. m. counterclockwise. Barber-Colman motors can be used to replace the original Diehl motors. A specially designed bracket is furnished with each replacement motor. The position of the motor in the tape-winder unit is shown by the reference symbol FUE–51–2 in figure 81.

(1) *Wiring change.* The jumper from solder lug 10 to solder lug 12 on gang switch GS–2 (fig. 125) is eliminated in sets in which Barber-Colman motors are installed. The tape winder, therefore, is disconnected when the gang switch is positioned for d-c operation.

(2) *Receptacle designation.* The upper section of power receptacle DPR–1 (fig. 125) is stamped TAPE WINDER to indicate more clearly the proper section to be used with the tape winder.

160. Changes in Operating Procedure

When d-c power is used, position the tape chute of the upper reperforator to deflect the tape to the front and into the tape trough. Hand wind the tape as required.

161. Introduction to Test Requirements and Adjustment Procedures

The data in this section include requirements and adjustments for Teletypewriter Set AN/TGC–1 (or AN/TGC–1A). Reference is made to specific equipment manuals on individual components, when applicable, for detailed information on test requirements and adjustment procedures for those components.

162. Requirements and Adjustments for Monitor (Upper) Typing Reperforator

For detailed information on test requirements and adjustment procedure, see TM 11–2223.

163. Requirements and Adjustments for Tape-winder Unit

a. Motor Mounting Bracket (fig. 81).

(1) *Requirement.* The motor mounting bracket should be in such position that the drive shaft is approximately in line with the clutch shaft.

(2) *Adjustment.* To adjust, position by means of the motor-bracket mounting screws.

b. Tape-Reel Shaft (fig. 80).

(1) *Requirement.* Position the tape-reel shaft so that the end opposite that on which the tape reel fits will be flush with or will not extend from the gear-case box more than 0.030 inch. There should be some end play, not over 0.004 inch.

(2) *Adjustment.* To adjust, position the tape-reel shaft collars.

c. Tape-Reel Shaft Gear (fig. 81).

(1) *Requirement.* The center of the tape-reel shaft gear should line up with the center of the clutch shaft.

(2) *Adjustment.* To adjust, loosen the setscrew in the gear hub and move the gear to the required position; retighten setscrew.

d. Clutch Spring Tension (fig. 81).

(1) *Requirement.* With the tape reel in place on the tape-reel shaft and the motor running, hook a 32-ounce scale over one of the holding screws on the reel flange. It will require a pull of 16 to 20 ounces to hold the reel stationary.

(2) *Adjustment.* To adjust the clutch tension, hold the outer end of the clutch shaft steady by means of a screw driver inserted in the slot and loosen or tighten the clutch-shaft stop nut on the shaft inside the 1–to–1 gearbox.

164. Requirements and Adjustments for Receiving (Lower) Typing Reperforator

For detailed information on test requirements and adjustment procedure, see TM 11–2223.

165. Requirements and Adjustments for Multiple Transmitter Distributor and Base

a. General. The information below is arranged in the sequence which would be followed if a complete readjustment of the multiple transmitter distributor were undertaken. In following such procedure, parts or assemblies which are removed to facilitate adjustment will not be replaced until all other adjustments which would be facilitated by the removal of these parts are made. If one adjustment is changed, related adjustments will be checked because a change in one adjustment may affect related adjustments. These facts will be kept in mind when a single adjustment is to be made.

b. Index. When a complete test and adjustment is not involved, refer to the index to locate the desired information.

166. Details of Requirements and Adjustment Procedures

The information in each paragraph is arranged under two headings—requirements and adjustments.

a. Requirements. Measurements, spring tensions, settings, etc., that have been found to give the best results are furnished under this heading. Some requirements have a very small working margin. Owing to slight differences in various multiple transmitter distributors of the same model, some multiple transmitter distributors

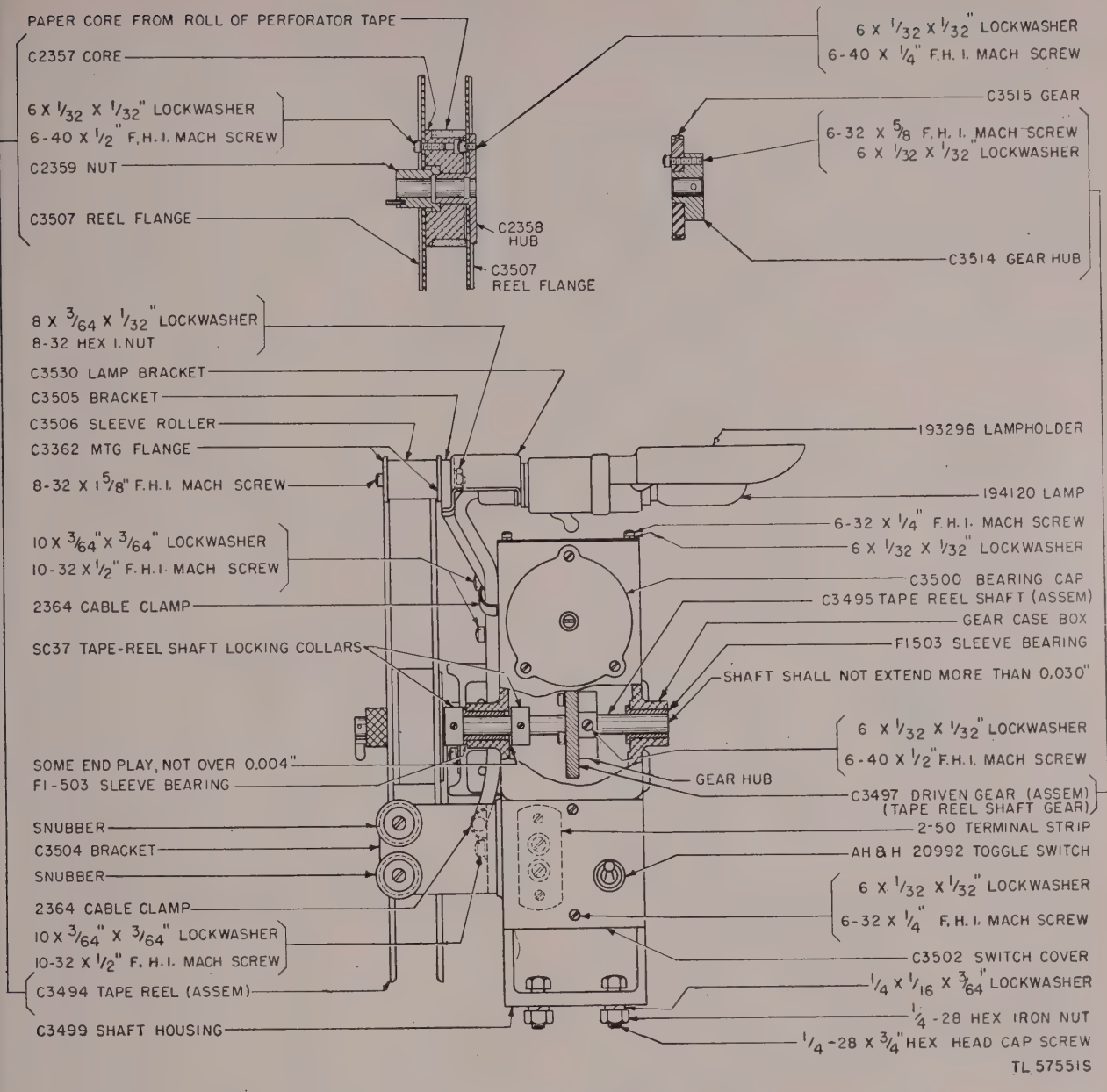
PAPER CORE FROM ROLL OF PERFORATOR TAPE
C2357 CORE
6 X 1/32 X 1/32" LOCKWASHER
6-40 X 1/2" F.H.I. MACH SCREW
C2359 NUT
C3507 REEL FLANGE
C2358 HUB
C3507 REEL FLANGE
6 X 1/32 X 1/32" LOCKWASHER
6-40 X 1/4" F.H.I. MACH SCREW
C3515 GEAR
6-32 X 5/8 F.H.I. MACH SCREW
6 X 1/32 X 1/32" LOCKWASHER
C3514 GEAR HUB
8 X 3/64 X 1/32" LOCKWASHER
8-32 HEX I. NUT
C3530 LAMP BRACKET
C3505 BRACKET
C3506 SLEEVE ROLLER
C3362 MTG FLANGE
8-32 X 1 5/8" F.H.I. MACH SCREW
193296 LAMPHOLDER
194120 LAMP
6-32 X 1/4" F.H.I. MACH SCREW
6 X 1/32 X 1/32" LOCKWASHER
10 X 3/64" X 3/64" LOCKWASHER
10-32 X 1/2" F.H.I. MACH SCREW
C3500 BEARING CAP
C3495 TAPE REEL SHAFT (ASSEM)
2364 CABLE CLAMP
GEAR CASE BOX
SC37 TAPE-REEL SHAFT LOCKING COLLARS
F1503 SLEEVE BEARING
SHAFT SHALL NOT EXTEND MORE THAN 0.030"
6 X 1/32 X 1/32" LOCKWASHER
6-40 X 1/2" F.H.I. MACH SCREW
SOME END PLAY, NOT OVER 0.004"
FI-503 SLEEVE BEARING
GEAR HUB
C3497 DRIVEN GEAR (ASSEM)
(TAPE REEL SHAFT GEAR)
SNUBBER
2-50 TERMINAL STRIP
C3504 BRACKET
AH&H 20992 TOGGLE SWITCH
SNUBBER
6 X 1/32 X 1/32" LOCKWASHER
2364 CABLE CLAMP
6-32 X 1/4" F.H.I. MACH SCREW
10 X 3/64" X 3/64" LOCKWASHER
10-32 X 1/2" F.H.I. MACH SCREW
C3502 SWITCH COVER
C3494 TAPE REEL (ASSEM)
1/4 X 1/16 X 3/64" LOCKWASHER
1/4-28 HEX IRON NUT
C3499 SHAFT HOUSING
1/4-28 X 3/4" HEX HEAD CAP SCREW
TL 57551S

Figure 80. Tape-winder unit, front view.

function better when clearances are adjusted to recommend minimum values, while other transmitter distributors function better with clearances adjusted to maximum values. The same is true for spring tension, air gaps, etc. Therefore, the requirements given for clearances, spring tensions, etc., will be applied as necessary to give the best operation for the particular multiple transmitter distributor being adjusted.

b. Adjustments. Each adjustment is described in the text and for further clarity often is indicated in the illustrations. The adjustments vary in nature—replacing an old spring with a new one; bending a leaf spring with a spring bender; repositioning an eccentric screw; inserting shims between parts; etc. As a starting point when making adjustments, set the clearances etc., midway between minimum and maximum values until it can be determined if more critical adjustment is required.

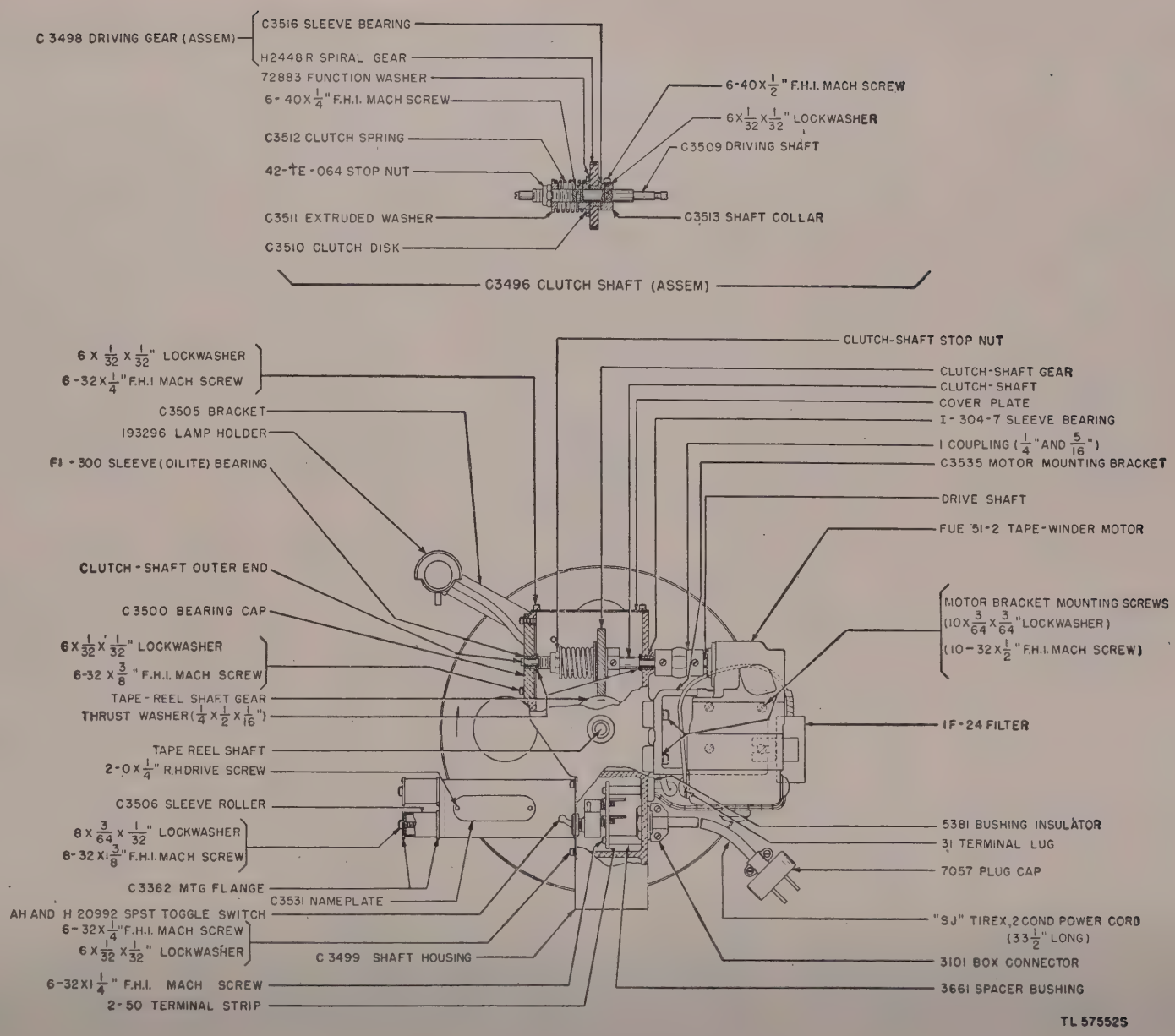

Figure 81. Tape-winder unit, right side view.

167. Preparation for Checking and Adjusting

a. General. Before proceeding to adjust any part, read the description of the adjustment carefully. After the adjustment is completed, be sure to tighten any screws or nuts which may have been loosened. If a part that is mounted on shims is to be dismantled, the number of shims used at each of its mounting screws will be noted so that the same shim pile-up may be replaced when the part is remounted.

b. Spring Tension. Spring tension values given in this manual were derived from measurements made with teletypewriter spring scales which are calibrated for use in a vertical pull position. When the scales are used in any other position, the reading is an indicated value. To get proper spring value readings, use spring scales included in the teletypewriter Tool Equipment TE–50 (fig. 28).

c. Fixed Pivots. Solid black circles on illustrations indicate fixed pivots.

168. Multiple Transmitter Distributor Units

The requirements and adjustments for the two message transmitters are the same as those for the number transmitter. The requirements and adjustments described in the following paragraphs are the same for each of the three transmitter units.

169. Transmitting-Cam Cylinder End Play (fig. 82)

a. Requirement. The transmitting-cam cylinder should have some end play, not over 0.002 inch.

b. Adjustment. Add or remove shims between the transmitting-cam cylinder and the side-frame bearing as required. Further refine this adjustment by positioning the clutch driving member on the transmitting shaft.

170. Clutch Spring Compression (fig. 82)

a. Requirement. With the clutch teeth engaged, insert a 32-ounce scale through the hole in the side frame, hook the scale over the clutch driven member projection, and pull directly in line with the shaft. It should require 9 to 12 ounces to separate the clutch teeth.

b. Adjustment. Replace the clutch spring with a new spring.

171. Clutch (fig. 82)

a. Requirement. There should be a 0.005- to 0.015-inch clearance between the clutch teeth when the clutch is fully disengaged.

b. Adjustment. Position the clutch throw-out lever by adding or removing shims between the shoulder on the throw-out lever post and the side frame.

172. Stop-Magnet Bracket (fig. 82)

a. Requirement. With the magnet armature held against the magnet cores, there should be 0.004- to 0.012-inch clearance between the clutch throw-out lever and the high point of the cam on the clutch driven member.

b. Adjustment. Loosen the stop-magnet bracket mounting screws and position the bracket. Tighten the mounting screws.

173. Armature Spring Tension (fig. 82)

a. Requirement. With the clutch throw-out lever on the low part of the clutch driven member,

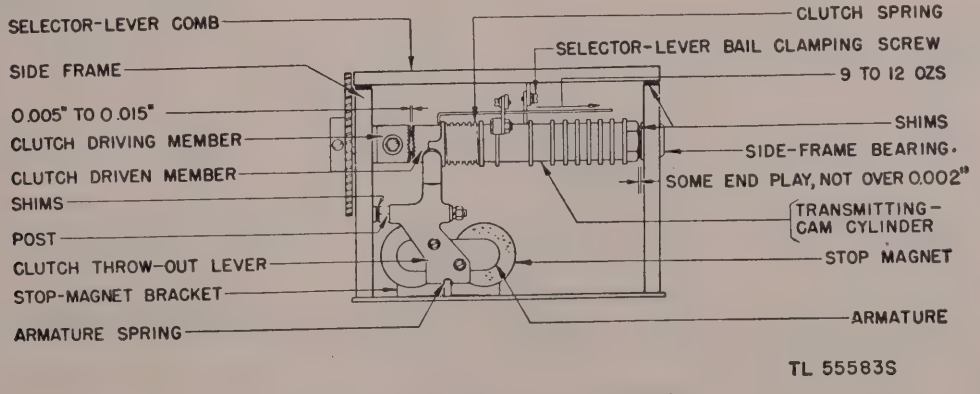

Figure 82. Transmitting-cam cylinder.

unhook the armature spring from the spring post and hook an 8-ounce scale in the spring eye. It should require 2 to 3½ ounces to extend the spring to its operating position length.

b. Adjustment. Replace the armature spring with a new spring.

174. Transmitting Contact Gap (fig. 83)

a. Requirement. With any contact lever on the high part of its cam, the contact gap should be 0.020 to 0.025 inch, with the exception of the start-stop contacts where the gap should be 0.015 to 0.025 inch.

176. Comb-Shaft Retainers (fig. 85)

a. Requirement. The comb shaft should be clamped by the retainers so that it rests at the bottom of the shaft slot.

Note. Before making this adjustment make certain that the side of the retainer in which the end of the slot is closest to the hole is at the right.

b. Adjustment. Loosen the retainer clamp screw on each end of the comb and position each retainer in such direction that the eccentric slot in the retainer takes up the clearance between the shaft and the bottom of the shaft slot. Tighten the clamp screws.

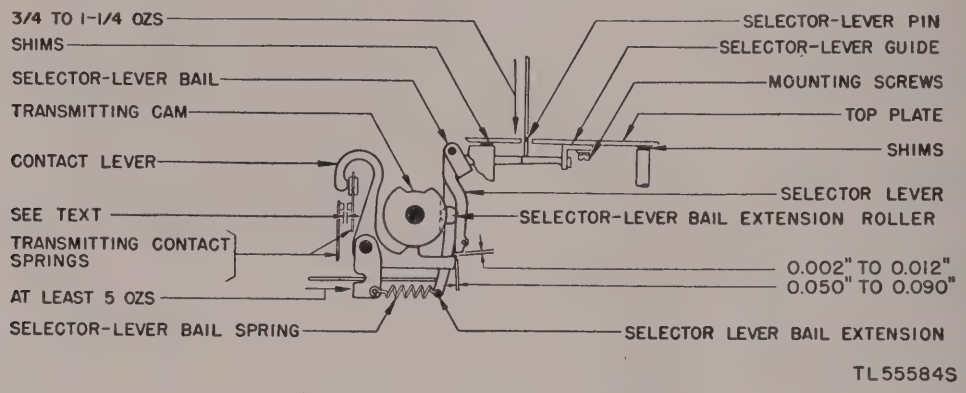

Figure 83. Selector-lever mechanism.

b. Adjustment. Bend the shorter contact spring.

175. Transmitting-Contact Spring Pressure (fig. 84)

a. Requirement. With any contact lever on the low part of its cam, it should require a pressure of 4½ to 5½ ounces to open the associated contact when the push end of an 8-ounce scale is applied to the longer contact spring just above the contact point.

b. Adjustment. Bend the longer contact spring. Recheck the contact gap adjustment.

177. Tape-Out Contact-Lever Latch (fig. 86A)

a. Requirement. With the tape-out operating lever resting on the low part of its cam, there should be from 0.010- to 0.020-inch clearance between the latching surface of the tape-out contact-lever latch and the tape-out contact lever.

b. Adjustment. Loosen the tape-out contact-lever latch mounting-screw nut and position the mounting screw in the elongated hole of the bracket. Tighten the nut.

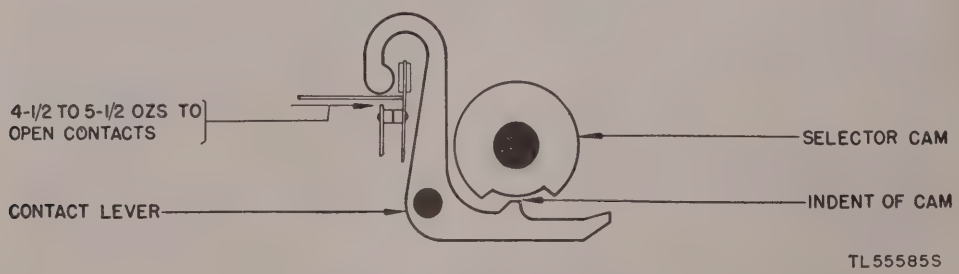

Figure 84. Transmitting contacts.

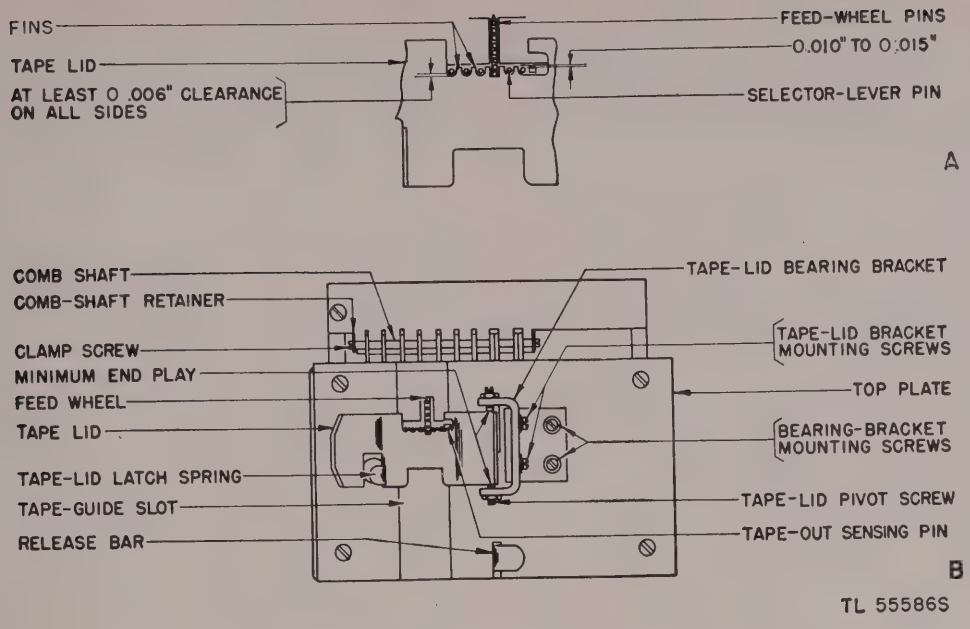

Figure 85. Top-plate mechanism.

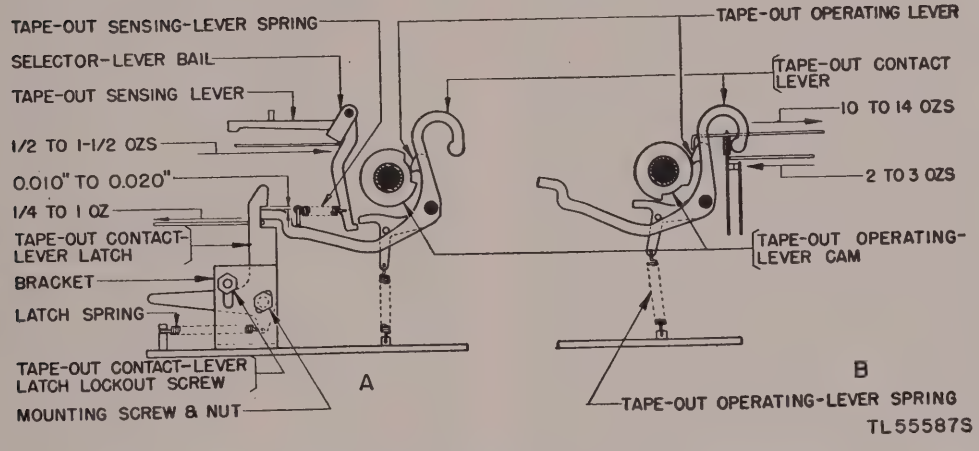

Figure 86. Tape-out mechanism.

178. Tape-Out Contact-Lever Latch Spring Tension (fig. 86A)

a. Requirement. With the tape-out operating lever resting on the low part of its cam and an 8-ounce scale hooked over the contact-lever latch at the bottom of the notch, it should require ¼ to 1 ounce to start the latch moving.

b. Adjustment. Replace the tape-out contact lever latch spring with a new spring.

179. Tape-Out Contact Gap (fig. 86A)

Note. Before making this adjustment on transmitter distributor units having a mechanism for momentarily opening the tape-out contact on the letters code combination, disable the tape-out contact-lever latch lock-out screw (fig. 86A) by moving it upward.

a. Requirement. With the transmitting-cam cylinder in its stop position (clutch teeth disengaged) and with the tape-out contact lever in its latched position, the contact gap should be 0.020 inch to 0.025 inch.

b. Adjustment. Bend the shorter contact spring.

180. Tape-Out Contact Spring Pressure (fig. 86B)

a. Requirement. With the transmitting-cam cylinder in its stop position (clutch teeth disen-

gaged) and with the tape-out contact lever in its unlatched position, it should require a pressure of 2 to 3 ounces to open the contact when the push end of an 8-ounce scale is applied to the contact spring just above the contact point.

b. Adjustment. Bend the longer contact spring. Recheck the tape-out contact gap adjustment (par. 179).

181. Tape-Out Operating-Lever Spring Tension (fig. 86B)

a. Requirement. With the transmitting-cam cylinder in its stop position (clutch teeth disengaged) and with the tape-out operating lever resting on the high part of its cam, hook the end of a 32-ounce scale over the top of the tape-out operating lever. It should require a pull of 10 to 14 ounces to start the lever moving away from the cam.

b. Adjustment. Replace the tape-out operating-lever spring with a new spring.

182. Release-Bar Contacts (fig. 87)

a. Contact Gap (Between Heavy Short and Long Contact Springs).

(1) *Requirement.* With the release bar fully depressed, there should be a gap of 0.020 to 0.025 inch between the contact on the heavy short contact spring and the contact of the long contact spring (fig. 87A).

(2) *Adjustment.* Bend the short heavy contact spring.

b. Spring Tension (Long Contact Spring).

(1) *Requirement.* With the release bar in the unoperated position (up), it should require a tension of 2½ to 3½ ounces to open the contacts when an 8-ounce scale is hooked over the long contact spring just above the contact point and pulled horizontally (fig. 87B).

(2) *Adjustment.* Bend the long contact spring. Recheck the contact gap adjustment (*a* above).

c. Contact Gap (Between Short Thin and Long Contact Spring).

(1) *Requirement.* With the release bar unoperated, there should be a gap of 0.010 to 0.015 inch between the contact of the short thin contact spring and the contact of the long contact spring (fig. 87B).

(2) *Adjustment.* Bend the short thin contact spring stiffener.

d. Spring Tension (Short Thin Contact Spring).

(1) *Requirement.* With an 8-ounce scale hooked over the short thin contact spring at the contact point, it should require 2½ to 3½ ounces just to start moving the spring away from the spring stiffener (fig. 87B).

(2) *Adjustment.* Bend the short thin contact spring.

183. Release-Bar Spring Tension (fig. 87B)

a. Requirement. Apply the push end of an 8-ounce scale to the top of the release bar and push vertically downward. It should require 1½ to 3 ounces to start the release bar moving.

b. Adjustment. Replace the release-bar spring with a new spring.

184. Selector-Lever Comb (fig. 83)

a. Requirement. With the transmitting-cam cylinder in its stop position, there should be a

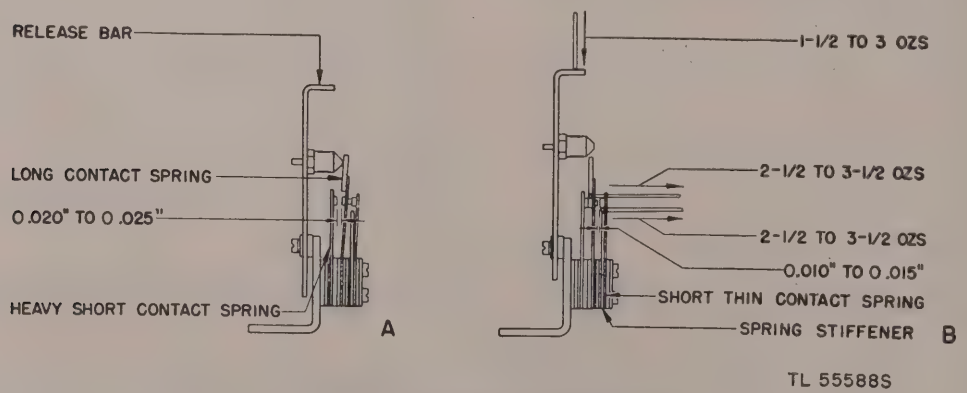

Figure 87. Release-bar mechanism.

clearance of 0.002 to 0.012 inch between the lower ends of the selector levers and the horizontal extensions of the contact levers.

b. Adjustment. Add or remove shims under the selector-lever comb on each of the side frames.

185. Top Plate (fig. 83)

a. Requirement. With the selector-lever pins just flush with the top surface of the tape-guide slot in the top plate, the lower ends of the five selector levers should overlap their contact levers by 0.050 to 0.090 inch.

b. Adjustment. Rotate the transmitting-cam cylinder until the selector-lever pins are flush with the top surface of the tape-guide slot, and shim the top plate at its four corners to obtain the proper overlap. Before tightening the mounting screws, position the top plate so that the selector-lever pins are alined approximately on the center line of the slotted hole in the top plate, and so that the clearance is not less than 0.006 inch between the pins (tape-out pin included) and the edges of the slotted hole.

186. Feed Wheel (figs. 85 and 88)

a. Feed Pins.

(1) *Requirement.* The feed pins on the tape feed wheel should extend 0.035 to 0.045 inch above the top surface of the channel in the top plate.

(2) *Adjustment.* Insert shims between the feed-wheel brackets and the bottom surface of the top plate.

b. Mounting Screws.

(1) *Requirement.* The mounting screws should engage the top plate with the maximum number of threads without protruding through the surface.

(2) *Adjustment.* Insert unused shims between the brackets and the clamp plates.

c. Feed Wheel.

(1) *Requirement.* Position the tape feed wheel so that when a piece of perforated tape (with perforations properly centered) is engaged by the feed wheel there will be an equal amount of clearance between the sides of the tape-guide slot in the top plate and the edges of the perforated tape.

(2) *Adjustment.* Adjust the feed wheel by the pilot screws. When adjusted, the tape feed wheel should have some end play, not more than 0.002 inch. Recheck the adjustment in *a* above.

Note. If necessary, the accessibility of the right pilot screw may be improved by removing the hexagonal post on which the transmitter filter is mounted, and rotating the post and filter to the right.

187. Selector-Lever Bail (fig. 83)

Note. Before making this adjustment on transmitter distributor units having a mechanism for momentarily opening the tape-out contact on the letters code combination, move the letters operating lever (fig. 90) toward the front of the transmitter by means of its mounting stud and the slotted hole in the bracket. This is done so that the vertical projection of the letters operating lever will not interfere with the free movement of the selector levers.

a. Requirement. With the selector-cam sleeve in its stop position (clutch fully disengaged) and with the selector-lever bail extension roller resting on the low part of its cam, the highest selector-lever pin should not project above the top surface of the tape-guide slot in the top plate and should not be below the top surface by more than 0.010 inch.

b. Adjustment. Insert a screw driver through a hole in the side frame, loosen the selector-lever bail clamping screw (fig. 82), and position the selector-lever bail with relation to its extension. Tighten the clamping screw.

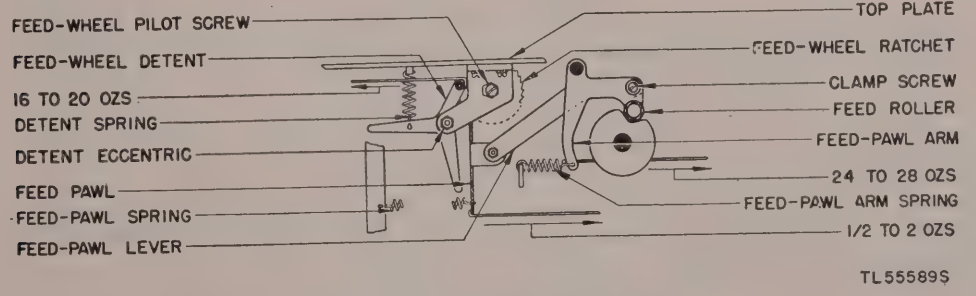

Figure 88. Feed-wheel mechanism.

188. Selector-Lever Bail Spring Tension (fig. 83)

a. Requirement. With the transmitting-cam cylinder in its stop position and with the selector-lever bail extension roller resting on the low part of its cam, place the push end of an 8-ounce scale against the selector-lever bail extension directly above the spring and push in line with the spring. It should require at least 5 ounces to start the selector-lever bail moving.

b. Adjustment. Replace the selector-lever bail spring with a new spring.

189. Selector-Lever Spring Tension (fig. 83)

a. Requirement. With the selector-lever pins in their uppermost position, apply the push end of an 8-ounce scale to the top of the selector-lever pin and push vertically downward. It should require ¾ to 1¼ ounces to start the pin moving.

b. Adjustment. Replace the selector-lever spring with a new spring.

190. Tape-Out Sensing-Lever Spring Tension (fig. 86A)

a. Requirement. With the tape-out sensing pin in its uppermost position, apply the push end of an 8-ounce scale horizontally at the bend of the tape-out sensing lever just below the selector-lever bail. It should require ½ to 1½ ounces to start the tape-out sensing lever moving.

b. Adjustment. Replace the tape-out sensing-lever spring with a new spring.

191. Feed-Wheel Detent (fig. 88)

a. Requirement. With a piece of tape perforated with the letters code combination (checked for 10 holes to the inch) in the transmitter, and with the cam sleeve rotated until the selector-lever pins are in the uppermost position, the pins should be approximately midway between the hinged edge and the trailing edge of the holes in the chadless tape. For perforated tape the pins should be centered in the perforations.

b. Adjustment. Hold the feed pawl away from the ratchet and position the detent eccentric, keeping the high part of the eccentric toward the rear of the unit.

192. Selector-Lever Guide (fig. 83)

a. Requirement. When a piece of tape, perforated with the letters code combination and properly centered (having No. 1 and No. 5 code holes equidistant from the edges), is placed in the transmitter and the cam sleeve rotated until the selector-lever pins are in their uppermost position, the pins should be approximately in line with the center line through each hole in the perforated tape.

b. Adjustment. Loosen the mounting screws of the selector-lever guide and position the guide. Tighten the mounting screws.

193. Feed-Wheel Detent Spring Tension (fig. 88)

a. Requirement. With the detent resting between two teeth on the feed-wheel ratchet, hook a 32-ounce scale over the roller of the detent and pull parallel to the top plate. It should require 16 to 20 ounces to start the detent moving.

b. Adjustment. Replace the feed-wheel detent spring with a new spring.

194. Feed-Pawl Lever (fig. 88)

a. Requirement. With the transmitting-cam cylinder in the stop position, there should be a clearance of 0.010 to 0.020 inch between the feed pawl and the face of the second tooth below the horizontal center of the feed-wheel ratchet.

b. Adjustment. Loosen the clamp screw and position the feed-pawl lever with respect to the feed-pawl arm. Tighten the clamp screw.

195. Feed-Pawl Arm Spring Tension (fig. 88)

a. Requirement. With transmitting-cam cylinder in the stop position and with the feed roller resting on the low part of its cam, unhook the feed-pawl spring from the feed pawl. With a 32-ounce scale hooked over the feed-pawl arm in line with the spring hole and pulled at right angles to the feed-pawl arm, it should require 24 to 28 ounces to start the feed-pawl arm moving. Rehook the feed-pawl spring.

b. Adjustment. Replace the feed-pawl arm spring with a new spring.

196. Feed-Pawl Spring Tension (fig. 88)

a. Requirement. With the transmitting-cam cylinder in the stop position, hook an 8-ounce scale

over the lower part of the feed pawl, near the spring hole, and pull at right angles to the feed pawl. It should require ½ to 2 ounces to start the feed pawl moving away from the ratchet wheel.

b. Adjustment. Replace the feed-pawl spring with a new spring.

197. Tape-Lid Pivot Screws (fig. 85B)

a. Requirement. The tape lid should be located centrally with respect to the tape-lid bearing bracket and should be free to pivot, without binding, with a minimum amount of end play at the bearings.

b. Adjustment. Adjust the two tape-lid pivot screws to meet the above requirements. Tighten the two locknuts.

198. Tape-Lid Vertical Adjustment (fig. 85B)

a. Requirement. The tape lid should rest flatly along both edges of the tape-guide slot in the top plate.

b. Adjustment. Loosen the two tape-lid bearing bracket mounting screws and position the tape lid to meet the above requirement. Tighten the mounting screws.

Caution: In making this adjustment, make sure that the lowest section of the tape lid is within the tape-guide slot of the top plate.

199. Tape-Lid Horizontal Adjustment (fig. 85A)

a. Requirements. The horizontal adjustment of the tape lid should meet the following requirements:

(1) The feed-wheel pins should line up centrally between the fins of the feed-wheel pin slot in the tape lid.

(2) With the selector-lever pins in the upper position, there should be at least 0.006-inch clearance between the selector-lever pins (tape-out sensing pin included) and any part of the tape lid.

(3) The selector-lever pins should be inside their slots and 0.010 to 0.015 inch from the end of the tape fins.

b. Adjustment. Loosen the tape-lid bracket mounting screws (fig. 85B) and position the tape lid to meet all three requirements (*a* above). Tighten the mounting screws.

200. Tape-Lid Latch Spring (fig. 89)

a. Requirement. The tape-lid latch spring should be adjusted vertically so that the tape lid latches firmly.

b. Adjustment. Loosen the tape-lid latch spring mounting screws, position the spring up or down to meet the requirement, and tighten the mounting screws.

201. Tape-Lid Latch Spring Tension (fig. 89)

a. Requirement. With the tape lid latched, apply a 32-ounce scale at right angles to the uppermost bent section of the latch spring and push downward. It should require 12 to 16 ounces to just start deflecting the spring.

b. Adjustment. Gradually bend the spring approximately midway between its upper mounting hole and the top plate.

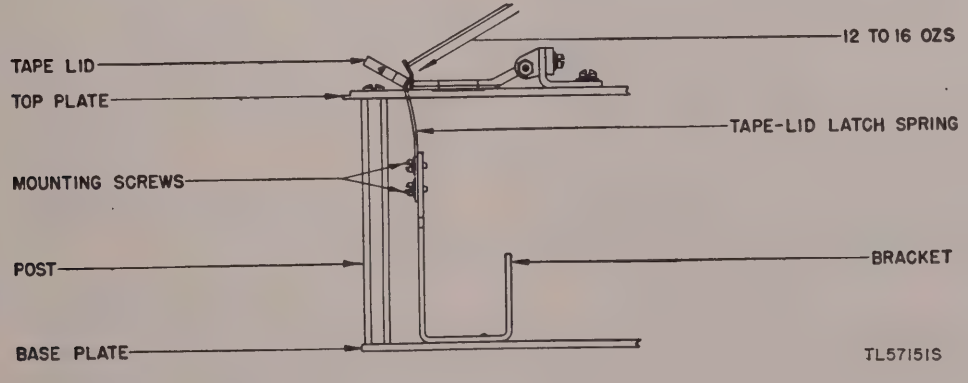

Figure 89. Tape-lid mechanism.

202. Letters Operating-Lever Horizontal Extension (fig. 86A)

a. Requirement. Move the tape-out contact-lever latch lock-out screw upward so that the lock-out screw is ineffective. Set up the letters code combination and rotate the cam sleeve manually until the letters operating lever (fig. 90) is resting on the low part of its cam. With the letters operating lever in this position, there should be 0.010- to 0.020-inch clearance between the latching surface of the tape-out contact-lever latch and the tape-out contact lever.

b. Adjustment. Loosen the horizontal extension clamping screw (fig. 90) and position the letters operating-lever horizontal extension with respect to the tape-out contact lever. Tighten the extension clamping screw.

Note. After completing the letters operating-lever horizontal extension adjustment, make the tape-out contact-lever latch ineffective by positioning the lock-out screw downward so as to provide a clearance of at least 0.010 inch between the end of the tape-out contact lever and the tape-out contact-lever latch.

203. Letters Operating-Lever Horizontal Extension Spring Tension (fig. 90)

a. Requirement. With the letters operating lever resting on the high part of its cam, hook a 32-ounce scale over the vertical arm of the letters operating lever as close as possible to the selector lever and pull at right angles to the letters operating lever. It should require 10 to 14 ounces to start the letters operating lever moving.

b. Adjustment. Replace with a new letters operating-lever horizontal extension spring.

204. Release-bar Latch

a. Requirement.

(1) With the release bar fully depressed there should be some clearance, not more than 0.010 inch, between the release-bar latch and the latching edge of the release bar.

(2) When the release bar is latched and the release-bar slot is fully engaging the release-bar latch there should be some clearance, not more than 0.010 inch, between the slot in the release bar and the top plate.

b. Adjustment.

(1) To meet the requirement in *a*(1) above, bend the release-bar latch.

(2) To meet the requirement in *a*(2) above, loosen the release-bar latch mounting screws and position the latch in its mounting holes.

205. Multiple Transmitter Distributor Base

The requirements and adjustments for the multiple distributor base are described in the following paragraphs. These adjustments should be made with the motor unit removed from the base casting. To remove the motor unit, disconnect the three wires from the motor unit at the terminal block, and remove the governor-adjusting bracket. Remove the four screws which mount the two motor plates to the base casting, and remove the motor unit by lowering it through the base casting.

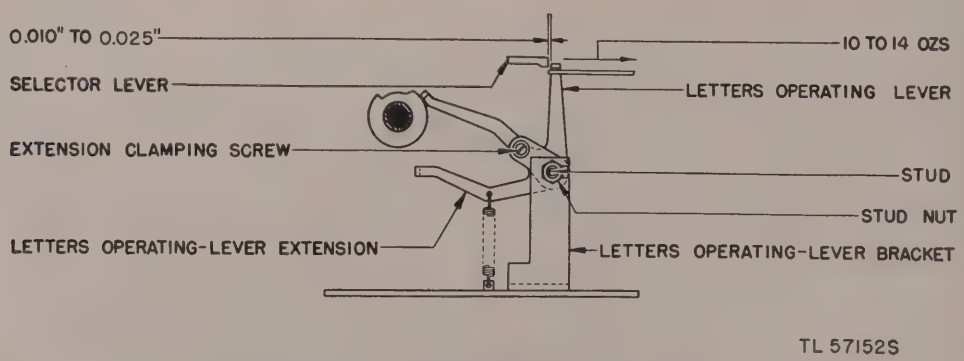

Figure 90. Letters operating-lever mechanism.

206. Main-Shaft Bearings Alinement (fig. 91)

a. Requirement. The main shaft should turn freely in its bearings. Check throughout one complete revolution of the main shaft.

b. Adjustment. Loosen the mounting screws of the two main-shaft bearings. Aline the bearings so that the shaft turns freely. If necessary, add or remove shims between either bearing and its base on the base casting. Tighten the mounting screws of both bearings.

209. Governor Speed-Adjusting Wheel Friction-Washer Spring Tension (fig. 92)

a. Requirement. With the governor-adjusting bracket, the brush spring plate, and the governor cover removed, turn the adjusting wheel so that the tension on the governor contacts is 13 to 14 ounces. Measure this tension by hooking a 32-ounce scale over the contact-spring arm next to the contact and pulling parallel to the speed-adjusting spring. To measure the pressure of the speed-adjusting wheel friction washer, insert a bank pin in the leather rim (radially), hook a 32-ounce scale over the pin at the periphery of the adjusting wheel, and pull at right angles to the radius. It should require 16 to 24 ounces to start the wheel moving.

b. Adjustment. Remove the friction washer and bend the large projections to obtain the desired tension.

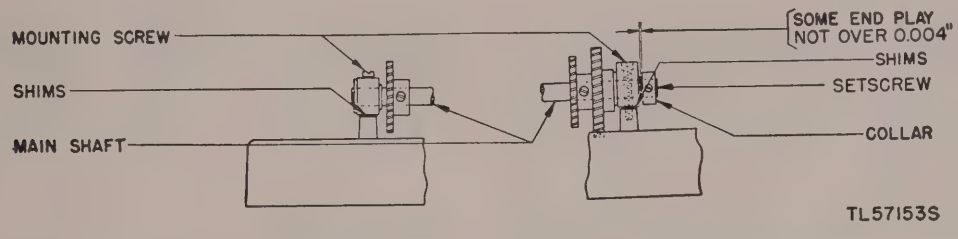

Figure 91. Main-shaft bearings alinement.

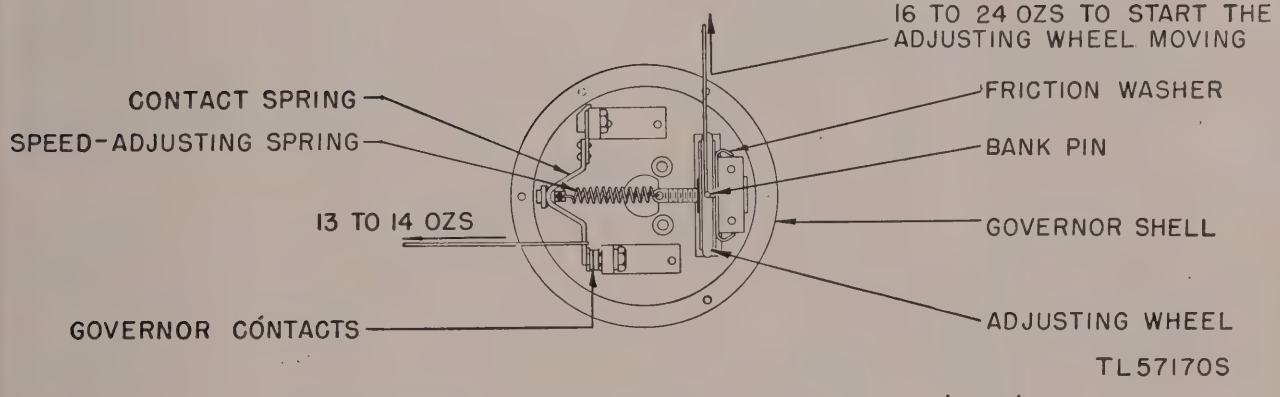

Figure 92. Governor speed-adjusting wheel friction-washer requirements.

207. Main-Shaft End Play (fig. 91)

a. Requirement. The main shaft should have some end play, not over 0.004 inch.

b. Adjustment. Loosen the two collar setscrews and position the collar on the main shaft. Tighten the setscrews.

208. Motor Pinion (fig. 91)

a. Requirement. The motor pinion should line up with the motor gear on the main shaft.

b. Adjustment. Loosen the four motor mounting screws and position the motor on its mounting brackets. Tighten the mounting screws.

210. Inner and Outer Disk Contact Springs (fig. 93)

a. Requirements. With the governor-adjusting bracket, the brush spring plate, and the gover-

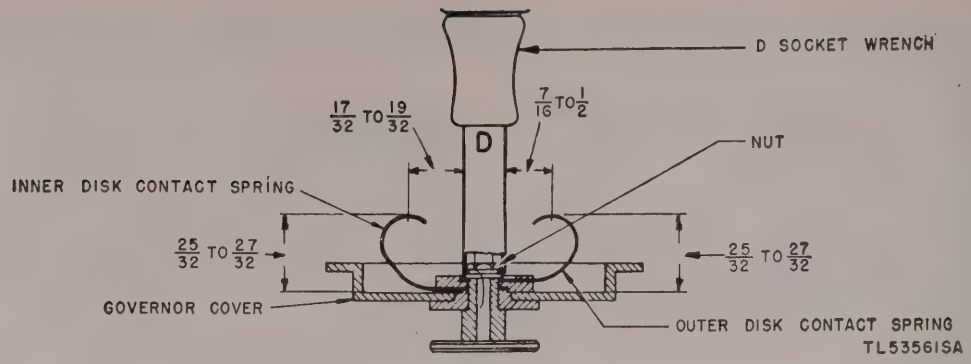

Figure 93. Governor inner and outer disk contact spring requirements.

nor cover removed, the inner and outer disk contact springs should meet the following requirements:

(1) The distance from the inner surface of the governor cover to the highest point of the contact springs should be 25/32 to 27/32 inch.

(2) Place a **D** socket wrench over the nut, located in the center of the governor cover, which is used to hold the contact springs in place. With a suitable scale, measure the radial distance from the vertical surface of the wrench to the point where the scale touches the curved surface of the inner disk contact spring. The distance should be 17/32 to 19/32 inch.

(3) In a similar manner, measure the distance from the wrench to the point of contact on the outer disk contact spring. This distance should be 7/16 to ½ inch.

b. Adjustment. Bend the inner and outer disk contact springs to meet the three requirements in *a* above. Replace the brush spring plate and the governor cover.

211. Governor Brush Spring Plate Bracket (fig. 94A)

a. Requirements.

(1) A line established by the center of the outer disk and the center of one of the brushes should pass through some portion of the other brush (fig. 94A).

(2) The surface of the brush spring plate bracket on which the brush spring plate is mounted should be in line with the outer surface of that part of the governor cover on which the target is mounted (fig. 94B).

(3) The bracket should be parallel to the edge of the motor base plate.

b. Adjustment. Position the brush spring plate bracket by means of its enlarged mounting holes to meet the three requirements (*a* above).

212. Governor Brush Spring Pressure (fig. 94B)

a. Requirements.

(1) *Inner disk brush spring.* Hook an 8-ounce scale over the inner disk brush spring, just to the right of the carbon contact brush as viewed from the rear of the motor, and pull horizontally away from the motor. It should require 4½ to 5½ ounces to start the brush moving away from the disk.

(2) *Outer disk brush spring.* Apply an 8-ounce push scale against the outer brush spring, just to the right of the carbon contact brush as viewed from the rear of the motor, and push horizontally toward the motor. It should require 4½ to 5½ ounces to start the brush moving away from the disk.

b. Adjustments.

(1) Remove and bend the inner disk brush spring.

(2) Remove and bend the outer disk brush spring.

Note. When the springs are replaced and the spring pressure obtained, see that the contact brushes lie flat against their respective disks and that the outer edges of the brushes are either flush with or not more than 3/64 inch inside the outer edges of the disks.

213. Governor-Adjusting Bracket (fig. 94B)

a. Requirement. With the governor-adjusting bracket in place, clearance between the speed-ad-

justing wheel and the speed-adjusting surface of the bracket should be 0.020 to 0.060 inch.

b. Adjustment. Bend the governor-adjusting bracket.

Note. Remove the governor-adjusting bracket after completing the governor-adjusting bracket adjustment.

214. Speed-Adjusting Lever Stop Plate (fig. 94B)

a. Requirement. There should be 0.006- to 0.050-inch clearance between the adjusting-lever wearing strip and the governor when the adjusting lever is held against the stop plate.

b. Adjustment. Position the adjusting-lever stop plate by means of its elongated mounting holes.

215. Governor Shims (fig. 94B)

a. Requirement. With the governor speed-adjusting lever in its unoperated position, there should be at least 0.006-inch clearance between the adjusting-lever wearing strip and the speed-adjusting wheel when the wheel is opposite the wearing strip, the wearing strip is tight against the casting, and all the end thrust of the motor armature is taken up in a direction to make this clearance a minimum.

b. Adjustment. Adjust by means of shims placed on the armature shaft between the governor hub and the end-frame casting of the motor. (If the wearing strip is not absolutely tight against the casting, bend it until it is.)

216. Motor-Gear Clearance

a. Requirement. Remount the motor unit on the base casting, replace the governor-adjusting bracket, and reconnect the three motor wires. There should be a barely perceptible amount of backlash between the motor pinion and the motor gear. Check this backlash throughout one complete revolution of the motor gear.

b. Adjustment. Loosen the four mounting screws which clamp the two motor plates to the base casting, and add or remove shims between the motor plates and their bosses on the base casting. Tighten the mounting screws.

217. Gear Guard

a. Requirement. There should be some clearance, not more than $\frac{1}{32}$ inch, at the closest point

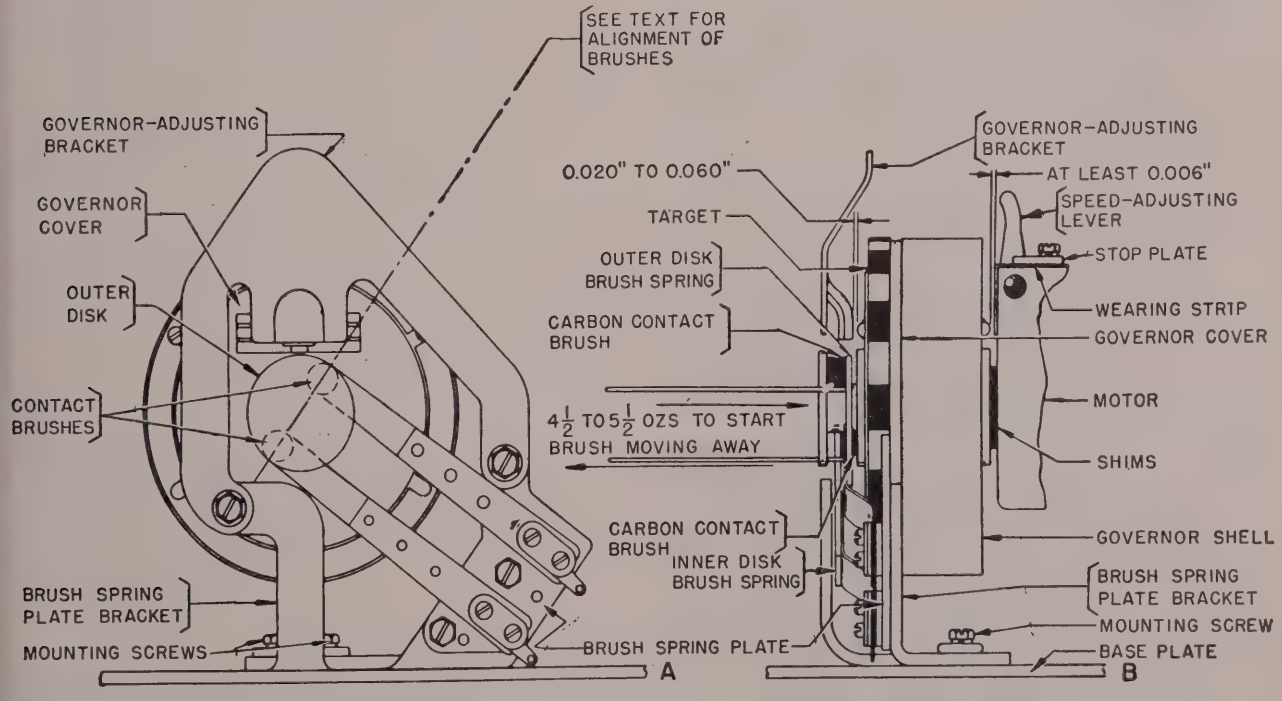

Figure 94. Governor-adjusting bracket and brush spring requirements.

between the gear guard and the motor gear throughout one complete revolution of the motor gear.

b. ADJUSTMENT. Loosen the gear guard mounting screws and position the gear guard. Tighten the mounting screws.

218. Distributor-Unit Position

a. REQUIREMENT. Each unit should be positioned on the base so as to provide a minimum amount of backlash, without binding, between the driven gear on the unit and the driving gear on the main shaft. Check this backlash throughout one complete revolution of the gear.

b. ADJUSTMENT. Loosen the three mounting screws and position the unit. Tighten the mounting screws.

Note. When the right-hand unit is mounted and adjusted, there should be at least ⅛-inch clearance between the soldered connection on one of its connection lugs and the gear guard. Bind the connection lug away from the gear guard, if necessary, but do not short across the adjacent connection.

219. Requirements and Adjustments for 255A Type Relays

a. PREPARATION.

(1) *Relay and cover.* Remove the relay cover and blow out any accumulated dust. Wipe the relay and cover with a clean, soft cloth.

(2) *Contacts.*

(*a*) Back out contact screws to permit entrance of contact file. Remove pits and build-ups on the contacts with contact file.

(*b*) When cleaning the armature contacts, support the armature at its midposition by means of the opposite contact screw to avoid bending the armature or contact springs.

Caution: Use light pressure when filing the armature contacts.

(*c*) After using contact file, remove any loose particles and polish the contacts with a burnisher.

(3) *Armature, pole-piece screws, and relay terminals.*

(*a*) Remove any particles adhering to the armature or pole-piece screws by pressing a fresh piece of friction tape, wrapped around a piece of thin stiff nonmagnetic metal, against the particles. Do not rub the tape against the armature or pole-piece screws as this rubbing will leave a residue which will collect further particles.

(*b*) Make sure that the pole-piece screws and relay terminals are clean.

b. REQUIREMENTS.

(1) *Armature.*

(*a*) The armature should not touch the inside of the spool.

(*b*) The contacts should aline so that the centers of the contacts will not be out of alinement by more than 25 percent of the contact diameter.

(2) *Armature contact springs alinement.* The armature contact springs should be parallel to the armature. The tips of the armature contact springs should rest against each other, approximately flat across their width, with a pressure of 1 to 2½ ounces measured on one spring at the contact with the other spring held so that it cannot follow its mate. If necessary, back off the contact screws.

(3) *Contact screw.* In its normal nonoperated position, the clearance between the armature and either contact screw should be approximately equal and when the armature is held against one contact screw there should be 0.003-inch to 0.005-inch clearance between the armature and the other contact screw.

(4) *Pole-piece screws.*

(*a*) When the armature is held first against one contact screw and then against the other, the armature stop pins should not touch the pole-piece screws.

(*b*) The armature should be centered in the magnetic field between the pole-piece screws; that is, the armature either should float in the gap between the contact screws or it should stay against either contact with approximately the same pressure when moved against either contact by hand.

c. ADJUSTMENTS.

(1) *Armature.*

(*a*) Loosen the screws holding the spool heads to the relay frame, and position the spool to meet the requirement given

in *b* (1) (*a*) above. Tighten the screws.

(*b*) Loosen the armature clamping screws and position the armature both vertically and horizontally to meet the requirement given in *b* (1) (*b*) above. Tighten the screws.

Note. To aid in aligning the armature contacts, the contact screw brackets may be positioned by means of the enlarged mounting holes in the relay frame.

(2) *Armature contact springs alinement.* Bend the armature contact spring toward or away from the other armature contact spring as required to meet the requirements in *b* (2) above and as close as practicable to the point where the contact spring is riveted to the armature. Reset the contact screws.

(3) *Contact screw.* Back off the pole-piece screws as far as possible and position the contact screw to meet the requirement given in *b* (3) above.

Note. The contact screws should be sufficiently tight in their brackets to hold any adjusted position. If necessary, remove the contact screw from the bracket and force the two portions of the split end of the bracket closer together to meet this requirement.

(4) *Pole-piece screws.*

(*a*) Back off both pole-piece screws and check the contact screw adjustment. Readjust if necessary.

(*b*) Advance the right pole-piece screw until, with its locknut (or knurled tension knob) tight, the right pole-piece screw pushes the armature far enough to just touch the left-hand contact screw. Back off the right pole-piece screw approximately one-fourth turn from this position until the requirement given in *b* (4) (*a*) above is met. Tighten the locknut.

(*c*) Advance the left pole-piece screw until the requirement given in *b* (4) (*b*) above is met. Tighten the locknut. If tightening the locknut disturbs the adjustment, reposition the left pole-piece screw to meet the requirement and retighten the locknut.

Note. When adjusting the pole-piece screws on relays with knurled tension nuts, the nuts should be tightened sufficiently to hold the pole-piece screws in the adjusted position.

220. Test Requirements and Adjustments for Control Relays (fig. 95)

a. To measure contact adjustments, insert gage in armature gap and operate the relay with at least twice the specified operating current. Use Test Set I–181 to measure the current flow. Relay requirements, in chart form, are shown in figure 95. Make contacts should just close with specified gage and not close when a gage 0.001 inch thicker is used. Break contacts should just break with specified gage and not break when a gage 0.001 inch thicker is used. If contacts check not more than 0.001 inch above or below specified values, they need not be readjusted. If operate and nonoperate currents check within 10 percent of specified values, relay spring tensions need not be readjusted.

b. All control relays may be tested without removing them from the equipment drawer and relays RN, RC, RR1, RR2, RNN, and RA may be tested with the switches and other relays in any position. Relays RB, RBK1, and RBK2 may be tested for the requirements in figure 95, as follows:

(1) Relay RB—open contacts 1–2 and 3–4 of relay RNN (paper between the contacts may be used).

(2) Relay RBK1—place the DUPLEX SINGLE switch (SB) in the SINGLE position.

(3) Relay RBK2—place the DUPLEX SINGLE switch (SB) in the SINGLE position and the POLAR MAKE-BREAK switches (S3 and S4) in the MAKE-BREAK position.

DESIGNATION RA OR RB
RELAY NO. 202780
RESIDUAL GAP 0.003

BACK-STOP	ARM GAP MILS	WDG NO. 2 OP MA	WDG NO. 2 NON OP MA	WDG NO. 2 OP MA	WDG NO. 2 NON OP MA	ARM. GAP MILS	BACK-STOP
1	*						21
2	11		15		15	11	22
3							23
4	10					10	24
5	6			18		6	25
6							
7	6	18					

NO. 1 WDG 140 Ω
NO. 2 WDG 1,300 Ω
REAR VIEW

DESIGNATION RN
RELAY NO. 18911
RESIDUAL GAP FIXED

WDG NO. 1 OP MA	WDG NO. 1 NON OP MA	ARM. GAP MILS	BACK-STOP
		*	1
	12	11	2
			3
14		10	4

NO. 1 WDG 550 Ω
REAR VIEW

DESIGNATION RNN
RELAY NO. 201284
RESIDUAL GAP 0.0015

WDG NO. 1 OP MA	WDG NO. 1 NON OP MA	ARM. GAP MILS	BACK-STOP
	7	*	1
		11	2
			3
		10	4
			5
8.5		6	6

NO. 1 WDG 2,000 Ω
REAR VIEW

DESIGNATION RRI
RELAY NO. 17825
RESIDUAL GAP FIXED

WDG NO. 1 OP MA	WDG NO. 1 NON OP MA	ARM. GAP MILS	BACK-STOP
	11.5	*	1
		13	2
			3
		9	4
13.5		4	5

NO. 1 WDG 550 Ω
REAR VIEW

DESIGNATION RR2
RELAY NO. 202741
RESIDUAL GAP 0.003

BACK-STOP	ARM. GAP MILS	WDG NO. 2 OP MA	WDG NO. 2 NON OP MA	WDG NO. 2 OP MA	WDG NO. 2 NON OP MA	ARM. GAP MILS	BACK-STOP
1	*						21
2	13		18		18	14	22
3	6						23
4						13	24
5	9					6	25
6	4	22					26
						9	27
				22		4	28

NO. 1 WDG 140 Ω
NO. 2 WDG 1,300 Ω
REAR VIEW

DESIGNATION RBK1
RELAY NO. 202025
RESIDUAL GAP 0.0015

WDG NO. 1 OP MA	WDG NO. 1 NON OP MA	ARM. GAP MILS	BACK-STOP
		10	1
5	4	6	2
			3
			4
			5
			6
			7
			8

NO. 1 WDG 2,250 Ω
REAR VIEW

DESIGNATION RBK2
RELAY NO. 19629
RESIDUAL GAP 0.0015

WDG NO. 1 OP MA	WDG NO. 1 NON OP MA	ARM. GAP MILS	BACK-STOP
		*	1
	8	10	2
			3
		6	4
			5
		6	6
			7
10		6	8

NO. 1 WDG 2,000 Ω
REAR VIEW

DESIGNATION RC
RELAY NO. 17132
RESIDUAL GAP 0.006

WDG NO. 2 OP MA	WDG NO. 2 NON OP MA	ARM. GAP MILS	BACK-STOP
		13	1
		6	2
			3
		6	4
			5
		6	6
			7
	16	9	8
18		4	9

NO. 1 WDG 1,300 Ω
NO. 2 WDG 1,250 Ω
REAR VIEW

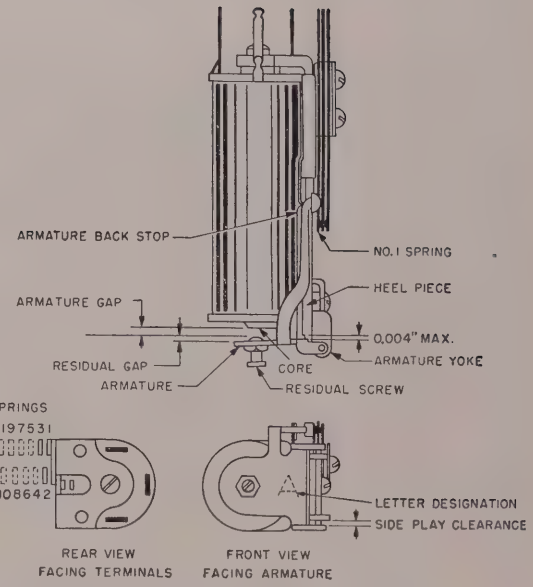

NOTES:
1. NO.1 WINDING IS THE INSIDE WINDING OF A CONCENTRIC-TYPE COIL AND THE ARMATURE END OF A TWO-SECTION COIL.
2. ● INSIDE TERMINAL OF WINDING.
3. * BACKSTOP ADJUSTMENT TO ALLOW A PERCEPTIBLE PLAY BETWEEN ARMATURE AND SPRING 2.

TL 572795

Figure 95. Relay requirements.

APPENDIX I

REFERENCES, ABBREVIATIONS, AND GLOSSARY

Note. For availability of items listed, check FM 21–6 and DA Supply Catalog SIG 1. Also see FM 21–6 for applicable technical bulletins, supply bulletins, modification work orders, and changes.

1. Parts List

SIG 3, list of Items for Troop Issue.
SIG 4–1, Allowances of Expendable Supplies.
SIG 4–2, Allowances of Expendable Supplies for Schools, Training Centers and Boards.
SIG 5, Stock List of All Items.
SIG 7, Organizational Spare Parts.
SIG 7 and 8, Organizational and Higher Echelon Spare Parts.
SIG 8, Higher Echelon Spart Parts.
SIG 10, Fixed Plant Maintenance List.
SB 11–10, Signal Corps Kit and Materials for Moisture-resistant Treatment.

2. Technical Manuals on Auxiliary Equipment and Test Equipment

TM 11–352, Printer TG–7–A and Teletypewriters TG–7–B and TG–37–B.
TM 11–355, Telegraph Terminal CF–2A (Carrier).
TM 11–355B, Telegraph Terminal Set TC–22–B (Carrier).
TM 11–356, Radio Teletype Terminal Equipment AN/FGC–1 or AN/FGC–1X.
TM 11–358, Telegraph Central Office Set TC–3.
TM 11–486, Electrical Communication Systems Engineering.
TM 11–2036, Test Set I–181.
TM 11–2201, Reperforator Teletypewriter Sets TC–16 and TC–17.
TM 11–2208, Test Set TS–2/TG.
TM 11–2209, Teletypewriter Set 131B2.
TM 11–2217, Distortion Test Set TS–383/GG (Teletype Signal Testing Equipment).
TM 11–2223, Typing and Nontyping Reperforators, Teletype Model 14.
TM 11–2513, Test Set I–193–A.
TM 11–2626, Test Unit I–176.

3. Packaging and Packing Instructions

a. Joint Army-Navy Packaging Specifications
JAN–D–169, Desiccants, Activated.
JAN–P–75, Tubes, Radio and Electron.
JAN–P–100, General Specification.
JAN–P–106, Boxes, Wood, Nailed.
JAN–P–116, Preservation, Methods of.
JAN–P–125, Barrier-material, Waterproof.
JAN–P–131, Barrier-material, Moistureproof-vaporproof, Flexible.
b. U. S. Army Specification
100–2E (and Signal Corps Supplement thereto), Marking Shipments by Contractors.
c. Signal Corps Instructions
720–7, Standard Pack.
726–15, Interior Marking.

4. Decontamination

TM 3–220 Decontamination.

5. Demolition

FM 5–25, Explosives and Demolitions.

6. Camouflage

FM 5–20, Camouflage, Basic Principles.

7. Other Technical Publications

TB SIG 13, Moistureproofing and Fungiproofing Signal Corps Equipment.
TB SIG 25, Preventive Maintenance of Power Cords.
TM 1–455, Electrical Fundamentals.
TM 11–462, Signal Corps Reference Data.
TM 11–680, Teletypewriter Circuits and Equipment (Fundamentals).

8. Forms

WD AGO Form 468 (Unsatisfactory Equipment Report).
AF Form 54 (Unsatisfactory Report).

9. Abbreviations

Abbreviations (or code designation)	*Term or quantity*
ac	alternating current (n).
a-c	alternating-current (a).
af	audio frequency.
arm	armature.
BK	break.
cap	capacitor.
cct, ckt	circuit.
dc	direct current (n).
d-c	direct-current (a).
DPDT	double-pole, double-throw switch.
DPST	double-pole, single-throw switch.
dwg	drawing.
F	fuse.
FB	fuse block.
FO–1	tape feed-out key No. 1.
FO–2	tape feed-out key No. 2.
fig	figure.
ga	gage.
L	live side of battery.
ltrs	letters.
LTS	line terminal strip.
ma	milliampere.
MB	message transmitter start lever.
MC	message transmitter tape-out contacts.
mf	microfarad.
mils	millimeters.
MON	monitor.
MJ–1 to 4	monitor jacks.
NB	number transmitter start lever.
NC	number transmitter automatic contacts.
No., Nos	number, numbers.
opm	operations per minute.
oz, ozs	ounce, ounces.
OPR, NON-OPR	operate-non-operate switch
par	paragraph.
PJ1 and 2	typing reperforator jacks.
RA	control relay in A transmitter circuit.
RB	control relay in B transmitter circuit.
RBK–1	break relay.
RBK–2	break relay.
RC	call-in relay.
rec	receive.
REC–1	receiving relay.
REC–2	receiving relay.
rect	rectifier.
ref	reference.
rels	release.
reperf	reperforator.
res	resistor.
ret	return.
RN	control relay for number transmitter and relay RNN.
RNN	control relay in A and B transmitter circuits.
RR1	feed-out control relay.
RR2	feed-out control relay.
Sig C	Signal Corps.
SA	NORMAL SPLIT switch.
SB	DUPLEX SINGLE switch.
S1	OPR. NON-OPR. switch, ckt No. 1.
S2	OPR. NON-OPR. switch, ckt No. 2.
S3	POLAR MAKE-BREAK switch, ckt No. 1.
S4	POLAR MAKE-BREAK switch, ckt No. 2.
SPST	single-pole, single-throw switch.
sw	switch.
spec	specification.
TD	transmitter distributor.
term	terminal.
TR	typing reperforator.
v	volt.
v-f	voice-frequency (a).
wdg	winding.
wh	white.
xmtg, xtg	transmitting.
xmtr, xtr	transmitter.

10. Glossary

The following glossary contains an explanation of the technical terms used in this manual.

Battery. The term battery normally is used when referring to a group of dry cells or storage cells. In teletypewriter communication it is common usage to refer to any d-c source used in the production of teletypewriter signals as battery.

Bias. The effect on the length of telegraph signals produced by the electrical characteristics of the line and equipment. If the received signal is longer than the signal sent, the distortion is called marking bias; if the received signal is shorter than the signal sent, the distortion is called spacing bias.

Capacitor. A device for inserting the property of capacitance into a circuit; two or more conductors separated by a dielectric.

Cross-fire. The condition in which telegraph signals on one circuit cause interference in other telegraph or telephone circuits.

Fuse. A wire, bar, or strip of fusible metal inserted as a safety device in an electric circuit. When the current increases beyond the rated strength of the fuse, the metal melts and thus the circuit is broken.

Fusetron. A fuse equipped with an overload feature. A fusetron will take a starting load up to 50 percent in excess of the rated value for a short period before blowing. The fusetron has a base connection similar to that of a fuse.

Governor. An automatic attachment to a motor, or the like, for controlling the speed of rotation.

Ground. The contact of a conductor with the earth; also the earth when used as a return conductor.

Jack. A receptacle which, in combination with a plug, provides a device by means of which connections readily can be made in electrical circuits.

Key. A hand-operated device for the rapid opening and closing of a circuit or circuits.

Make-and-break (neutral) operation. The term make-and-break (neutral) operation refers to the system whereby marking signals are formed by current impulses of one polarity, either positive or negative, and spacing signals are formed by reducing the current to zero or nearly zero.

Mark impulse. In make-and-break (neutral operation, the term mark impulse refers to the closed circuit signal, and the term space impulse refers to the open circuit signal. In other than make-and-break (neutral) operation, the term mark impulse is applied to the circuit condition which produces the same result in the terminal equipment that a mark impulse produces in make-and-break (neutral) operation. Similarly, in other than make-and-break (neutral) operation, the term space impulse is applied to the circuit condition which produces the same result in the terminal equipment that a space impulse produces in make-and-break (neutral) operation.

Normal duplex operation. The term normal duplex operation refers to simultaneous transmission and reception over two external circuits.

Normal single operation. The term normal single operation refers to transmission or reception over one external circuit but not simultaneously.

Operations per minute. The term operations per minute (o. p. m.) refers to the number of perforations punched and characters printed per minute. The equipment goes through one complete cycle of operation for each code perforation and character printed.

Plug. In combination with a jack, a device by which connections can be made readily in electrical circuits.

Polar operation. The term polar operation refers to the system whereby marking signals are formed by current impulses of one polarity and spacing impulses by current impulses of equal magnitude but opposite polarity.

Rectifier. A device for changing alternating current to pulsating direct current.

Space impulse. (See mark impulse.)

Split duplex operation. The term split duplex operation refers to simultaneous transmission and reception over four external circuits.

Split single operation. The term split single operation refers to transmission or reception over two external circuits but not simultaneously.

APPENDIX II

PARTS IDENTIFICATION LISTS AND TABLES OF REPLACEABLE PARTS

1. Requisitioning Parts

The listing of an item in this technical manual is not sufficient basis for requisitioning the item. Requisitions must cite an authorized basis, such as T/O & E; TE; TA; T/BA; SIG 6; SIG 7 & 8; SIG 7, 8 & 10; SIG 10; list of allowances of expendable material, or other authorized supply basis. For an index of available catalog pamphlets, in the Signal portion of the Department of the Army Supply Catalog, see the latest issue of SIG 1.

2. Alphabetical Index to Parts Identification Illustrations for Multiple Transmitter Distributor and Base

The following is an alphabetical index to the parts identification illustrations for the multiple transmitter distributor and base, component of Teletypewriter Set AN/TGC–1 (or AN/TGC–1A):

Name of part	Part No.	Fig. No.
Adjusting lever	7661	114
Adjusting wheel	6324	115
Armature	6710	114
Armature: electromagnet	93463	98
Bail extensions	97515	99
Ball bearing	5061	114
Bar	97584	108
Base: green wrinkle	110654	107, 108
Base plate	97500	98, 103
Bearing	97568	107
Bearing (assem)	6330	115
Block	6319	115
Bolt: 3/16–24 x 4	4871	108
Bracket	80337	115
Bracket	97541	98
Bracket	97543	98
Bracket	94546	98
Bracket	97548	104
Bracket	97554	105
Bracket	97569	108
Bracket	99115	98
Bracket	99355	110
Bracket	99356	110
Bracket	110778	105
Bracket	110781	105
Bracket	110834	109
Bracket	110956	113
Bracket: right	97556	105
Brush cap	77911	110
Brush holder cap	70873	114
Brush holder ring	71998	114
Brush holder: (with insulator)	70872	114
Brush spring plate	80340	115
Brush (with spring): electrical contact; carbon	8094	114
Bushing	76532	105
Bushing	83954	104
Bushing	90539	104
Bushing	97516	99
Bushing: bakelite	2529	103
Bushing: bakelite	78398	115
Bushing: bakelite	78438	115
Bushing: bakelite	95935	110
Bushing: rubber	126–123	114
Bushing; spacer	92685	98
Cable	110767	111
Cable (assem)	110768	112
Cable bracket	99205	107
Cable clamp	8253	108
Cable clamp	80708	99
Cable clamp	99373	107
Cable distributor	110792	98
Cable: governor circuit	110979	115
Cable: motor unit	110978	115
Cam sleeve (assem)	101766	102
Capacitor: 1 mf	78011	108
Capacitor: 0.1–0.1–0.01 mf	94679	108
Capacitor: 0.1 mf	95938	110
Capacitor: 0.01 mf	95937	110
Card holder	110955	113
Card-holder bracket (assem)	110957	113
Center contact governor (assem).	80352	115
Clamp	6318	115
Clamp plate	41732	104, 115
Clamp plate	97559	105
Clamping plate	80335	115
Clamping rod	73595	114

Name of part	Part No.	Fig. No.
Clip	99357	110
Clutch lever	97529	98
Clutch lever post stud	86209	106
Code plate: (blank)	106380	107
Collar	83740	107
Comb	97512	99
Contact (assem)	97547	104
Contact bracket	97530	103
Contact brush	78403	115
Contact lever	7318	103
Contact lever	97537	103
Contact point	72835	115
Contact screw	6320	115
Contact spring	41720	104
Contact spring	84666	104
Contact spring	84705	104
Contact spring (assem)	6314	115
Contact spring: long	97533	103
Contact spring: short	97534	103
Contact stop: long	97535	103
Contact stop: short	97536	103
Contact terminal	80334	115
Container	99354	110
Cord	110769	112
Cover: front	110676	113
Cover: left	110678	113
Cover: left rear	110679	113
Cover plate	2503	103
Cover plate	110772	113
Cover: right	110677	113
Cover top	110952	113
Cover: top (with tape chute).	110681	113
Detent lever	97557	105
Detent spring	110777	98, 105
Drive screw	75646	107
Driven clutch	7391	102
Driving clutch	7389	102
End shield: (with 70771 oiler)	73237	114
Extension	110841	106
Feed pawl	97527	101
Feed pawl arm	97526	99, 101
Feed pawl lever	97525	99, 101
Field coil	73239	114
Field core	73238	114
Field frame: (with 70771 oiler)	73236	114
Filter (assem)	99217	100
Foot: rubber	88924	108
Gear: 39 teeth	97576	107
Gear: 42 teeth	97563	102
Gear: 53 teeth	110651	107
Gear guard	110726	107
Gear hub	97564	102
Governor adjusting bracket	80338	115
Governor brush and speed adjusting bracket (assem)	80341	115
Governor cover	78451	115
Governor shell	78439	115
Guide	97561	105
Guide bushing	97583	98
Guide: punch	99283	105
Hub	97579	107
Inner disk brush spring: (with brush)	78400	115
Inner disk contact spring	78497	115
Insulation: (for one 73239 field coil)	73242	114
Insulator	3094	108
Insulator	41733	104, 115
Insulator	70724	108
Insulator	78437	115
Insulator	80336	115
Insulator bushing: bakelite	86868	115
Insulator: plate	2504	103
Latch	102937	105
Latch: lever	97545	98
Letters operating lever (assem)	97544	106
Lever	110842	106
Locking wedge	73243	114
Lockwasher	2191	98, 99, 100, 102, 103, 104, 105, 106, 107, 108, 114, 115.
Lockwasher	2669	98, 107, 114, 115
Lockwasher	3640	98, 100, 101, 104, 105, 106, 108, 113
Lockwasher	90791	99
Lockwasher	104451	114
Lubricator: felt	99117	98
Magnet coil: 105 ohms	M–177	98
Motor cover (assem)	110680	113
Motor-governor filter (assem)	99250	110
Motor, series: 1/25-hp, 110-v, 60-cycle a-c (GE model 5BA65AA77)	6708	114
Nut: hex; 3/16–24	70887	108
Nut: hex; 4–40	3599	98, 101, 104, 106, 113.
Nut: hex; 6–32	6345	115
Nut: hex; 6–40	3598	98, 99, 101, 103, 105, 106, 110
Nut: hex; 6–40	3606	105
Nut: hex; 10–30	34–59	114
Nut: hex; 10–32	34–4	115
Nut: hex; 10–32	89897	98
Oil cup	89896	98
Oil wick: felt	97481	107
Oiler	70771	114
Outer contact disk	78443	115
Outer disk brush spring: (with brush)	78399	115
Outer disk contact spring	78496	115

Name of part	Part No.	Fig. No.
Pawl: ratchet	97538	103
Pin: clevis	92175	105
Pinion: 10 teeth	110650	114
Plate	97585	108
Plate	102942	105
Plate	110652	100
Plug: 8-prong	98544	111
Plug: polarized	107156	112
Post	86869	115
Post	97586	107
Post	99204	107
Post	99293	107
Post	110653	98
Post	110703	107
Post: anchor	80478	103
Power cable (assem)	110766	111
Release arm	97931	106
Release bar	97549	104
Resistor: 10 ohms	96781	109
Resistor: 300 ohms	71853	108
Resistor: 500 ohms	70722	108
Resistor: 1,000 ohms	90814	108
Resistor bracket (assem)	110835	109
Resistor unit (assem): 250–500–1,000 ohms	97571	108
Retainer	97528	99
Retainer	99116	98
Retainer: copper	71189	114
Retainer: steel	73231	114
Retard coil: 1.1 ohms	95936	110
Roller	7027	99, 101
Roller: lever	7679	105
Screw: 0.138–40 x 5/16	1268	98
Screw: 2–56 x 0.188	1164	98, 99
Screw: 4–40 x 3/16	1163	98
Screw: 4–40 x 3/16	76167	105
Screw: 4–40 x 3/16	83408	107
Screw: 4–40 x 1/4	1028	98, 108
Screw: 4–40 x 1/4	1162	99, 101, 104, 105, 106
Screw: 4–40 x 1/4	74613	106
Screw: 4–40 x 9/32	102052	105
Screw: 4–40 x 5/16	1168	104, 106, 115
Screw: 4–40 x 1/2	1051	100
Screw: 4–40 x 11/16	83856	104
Screw: 4–48 x 3/16	78025	114
Screw: 6–32 x 7/16	1266	110
Screw: 6–40 x 3/16	80706	114
Screw: 6–40 x 7/32	93141	110
Screw: 6–40 x 1/4	1161	99, 100, 108
Screw: 6–40 x 1/4	8543	98, 103, 105, 113
Screw: 6–40 x 1/4	80444	98, 115
Screw: 6–40 x 9/32	82702	110
Screw: 6–40 x 5/16	1160	102
Screw: 6–40 x 23/64	80342	115
Screw: 6–40 x 3/8	1026	98, 107
Screw: 6–40 x 3/8	103539	98
Screw: 6–40 x 7/16	1169	98
Screw: 6–40 x 7/16	82440	107, 110

Name of part	Part No.	Fig. No.
Screw: 6–40 x 1/2	33–158	98
Screw: 6–40 x 1/2	1269	102, 107, 108
Screw: 6–40 x 37/64	102465	107
Screw: 6–40 x 5/8	6811	103, 107
Screw: 6–40 x 11/16	1272	114
Screw: 6–40 x 3/4	1226	107
Screw: 6–40 x 15/16	78028	110
Screw: 6–40 x 1 13/16	110824	108
Screw: 6–40 x 2 7/16	1297	109
Screw: 8–32 x 5/16	101833	107
Screw: 10–32 x 5/16	97296	108
Screw: 10–32 x 9/16	44035	98
Screw: 10–32 x 5/8	78301	108, 114
Screw: 10–32 x 7/8	73244	114
Screw: 10–32 x 1 3/8	1258	107, 108
Screw: drive	103782	113
Screw: eccentric; 6–40	74171	105
Screw: hex; 4–40 x 1/4	80957	105
Screw: mach; 6–32 x 1/4	1064	115
Screw: mach; 6–32 x 11/32	6344	115
Screw: mach; 6–40 x 7/32	74059	99, 110
Screw: mach; 6–40 x 5/16	6746	98, 102, 114, 115
Screw: pilot; 1/4–32	1100	114
Screw: pivot; 6–40	70803	105
Screw: pivot; 6–40	72096	105
Screw: set; 10–32	86341	107
Screw: shoulder; 1/4–20	90952	108
Screw: shoulder; 4–40	33–170	113
Screw: shoulder; 4–40	1174	98
Screw: shoulder; 4–40	80283	101
Screw: shoulder; 6–40	99278	101
Screw: special; 4–40	7678	105
Screw: thumb	1073	113
Screw: thumb; 4–40	97560	105
Selector lever bail	97514	99
Selector lever No. 1, right	99259	99
Selector lever No. 2	99260	99
Selector lever No. 3	99261	99
Selector lever No. 4	99262	99
Selector lever No. 5	99263	99
Serial number plate: (blank)	35975	107
Set of letters-sensing mechanism parts	97949	106
Shaft	97506	102
Shaft	97513	99
Shaft	97540	103
Shaft	110673	107
Shim	200–214	113
Shim	7654	103
Shim	8896	98, 99, 105
Shim	71047	108
Shim	91617	114
Shim	98361	102
Shim	102861	105
Shims	98198	107
Side frames: left (withbushing)	97503	98, 102
Side frame: right (with bushing)	97501	98, 102

Name of part	Part No.	Fig. No.
Spacer	87398	106
Spacing collar	2526	103
Spring	35–70	99
Spring: clutch	80471	102
Spring: compression	75606	103
Spring: compression	71999	114
Spring: extension	2836	98
Spring: extension	3610	106
Spring: extension	4703	99
Spring: extension	6523	115
Spring: extension	55090	98, 101, 104
Spring: extension	60669	99
Spring: extension	98636	103
Spring: extension	101385	101
Spring: extension	101386	105
Spring post	74554	98, 104
Spring washer	83561	113
Sprocket: tape	97555	105
Stiffener	84892	104
Stiffener: long	97531	103
Stiffener: short	97532	103
Stop	84047	114
Strap	2980	108
Strap	97590	113
Strap: 2⅛″ long (with 82474 terminals)	76284	108
Strap: 6″ long (with 82474 terminals)	103161	108
Stud	7386	98
Stud	97550	104
Stud	97551	104
Tape chute (with bracket)	110953	113
Tape-out lever	97523	99
Tape retaining lid (hinged)	110780	105
Tape retaining lid (plastic)	97562	105
Top plate	97552	105
Top plate	110790	105
Terminal	81726	104
Terminal	82474	110, 111, 112
Terminal block (assem)	73670	108
Terminal end	89925	108
Terminal strip (assem)	97582	107
Washer	200–1348	98, 113
Washer	2438	98, 108
Washer	3650	108
Washer	8165	115
Washer	8330	114
Washer	36273	110
Washer	88455	108
Washer: bakelite	75750	109
Washer: bakelite	90096	108
Washer: fiber	78905	110
Washer: fiber	91837	114
Washer: flat	3438	98, 109, 115
Washer: flat	7002	98, 105, 106, 107, 108, 110, 113, 115
Washer: flat	41675	105
Washer: flat	73232	114
Washer: flat	73844	99
Washer: flat	75607	103
Washer: flat	80312	114
Washer: flat	84579	114
Washer: flat	102839	105
Washer: steel	103–27	99, 101, 104, 105, 106
Wearing strip	8222	114
Wick: felt	89881	98
Wick: felt	101591	98
Yoke	97542	98

3. Alphabetical Index to Parts Identification Illustrations for Tape Winder, Number-Tape Reel, Tape Chute, Spring Tape Holder, Power Cabinet, Signal Indicator Panel, and Rectifier Unit

Note.—For a listing of equipment drawer parts, refer to figure 19.

Following is an alphabetical index to the parts identification illustrations for the tape winder, number-tape reel, tape chute, spring tape holder, power cabinet, signal indicator panel, and rectifier unit, components of Teletypewriter Set AN/TGC–1 (or AN/TGC–1A).

a. Alphabetical Index for Tape Winder.

Name of part	Part No.	Fig. No.
Bearing cap	C3500	80, 81
Box connector	3101	81
Bracket	C3504	80
Bracket	C3505	80, 81
Bushing insulator	5381	81
Cable clamp	2364	80
Clutch disk	C3510	81
Clutch shaft (assem)	C3496	81
Clutch spring	C3512	81
Cord, power (SJ Tirex, 2-cond, 33½″ long).		81
Core	C2357	80
Coupling (¼″ x 5/16″ diam bores)	1	81
Cover plate	C3501	81
Driven gear (assem)	C3497	80
Driving gear (assem)	C3498	81
Driving shaft	C3509	81
Extruded washer	C3511	81
Filter	IF–24	81
Function washer	72883	81
Gear	C3515	80
Gear hub	C3514	80
Hub	C2358	80

a. Alphabetical Index for Tape Winder—Continued

Name of part	Part No.	Fig. No.
Lamp	194120	80
Lamp bracket	C3530	80
Lampholder	193296	80, 81
Locking collar, tape-reel, shaft	SC–37	80
Lockwasher: ¼ x 1/16 x 3/64		80
Lockwasher: 6 x 1/32 x 1/32		80, 81
Lockwasher: 8 x 3/64 x 1/32		80, 81
Lockwasher: 10 x 3/64 x 3/64		80, 81
Motor bracket	C3535	81
Motor, tape-winder	FUE–51–2	81
Mounting flange	C3362	80, 81
Name plate	C3531	81
Nut	C2359	80
Nut: hex; 8–32		80
Nut: hex; ¼–28		80
Plug cap	7057	81
Reel flange	C3507	80
Screw: fil head mach; 6–32 x ¼		80, 81
Screw: fil head mach; 6–32 x 3/8		81
Screw: fil head mach; 6–32 x 5/8		80
Screw: fil head mach; 6–32 x 1¼		81
Screw: fil head mach; 6–40 x ¼		80, 81
Screw: fil head mach; 6–40 x ½		80, 81
Screw: fil head mach; 8–32 x 1⅝		80
Screw: fil head mach; 8–32 x 1⅜		81
Screw: fil head mach; 10–32 x ½		80, 81
Screw: hex head cap; ¼–28 x ¾		80
Screw: round head drive; 2–0 x ¼		81
Shaft housing	C3499	80, 81
Shaft collar	C3513	81
Sleeve bearing	C3516	81
Sleeve bearing	FI–300	81
Sleeve bearing	I–304–7	81
Sleeve bearing	FI–503	80
Sleeve roller	C3506	80, 81
Spacer bushing	3661	81
Spiral gear (clutch-shaft gear)	H–2448–R	81
Stop nut	42–TE–064	81
Switch cover	C3502	80
Tape reel (assem)	C3494	80
Tape-reel shaft (assem)	C3495	80
Tape-winder motor	FUE–51–2	81
Terminal lug	31	81
Terminal strip	2–50	80, 81
Thrust washer (¼ x ½ x 1/16″)		81
Toggle switch (SPST)	AH & H20992	80, 81

b. Alphabetical Index for Number-tape Reel.

Name of part	Part No.	Fig. No.
Bearing	SR254	116
Bearing collar	C2554	116
Bracket	C3533	116
Brake	C3534	116
Cover	C3540	116
Hub	C2552	116
Lockwasher: 4 x 1/32 x 1/32		116
Lockwasher: 6 x 1/32 x 1/32		116
Lockwasher: 10 x 3/64 x 3/64		116
Nut: cap; 10–32		116
Nut: hex; 4–40		116
Nut: hex; 10–32		116
Reel (assem)	C3532	116
Reel flange	C3371	116
Reel-stud shaft	C3372	116
Rewind handle	C2553	116
Screw: fil head mach; 4–40 x ¼		116
Screw: fil head mach; 4–40 x 1		116
Screw: fil head mach; 6–40 x 3/16		116
Screw: fil head mach; 6–32 x 3/8		116
Screw: fil head mach; 10–32 x 5/8		116
Tape grip pin	C2549	116
Washer: brass; 4 x 9/32 x 0.025		116
Washer: brass; 6 x 3/8 x 0.032		116

c. Alphabetical Index for Tape Chute.

Name of part	Part No.	Fig. No.
Base	C3528	97
Chute	C3526	97
Lockwasher: 2 x 1/32 x 0.022		97
Lockwasher: 6 x 1/32 x 1/32		97
Pin: steel wire "S"; 19 (0.041) W. M. gage.		97
Pivot bearing	C3527	97
Screw: fil head mach; 2–56 x 1/8		97
Screw: fil head mach; 4–40 x 5/16		97
Screw: hex head mach; 6–40 x 3/8	80467	97
Screw: round head drive; 2–0 x 1/8		97
Spring	C3529	97
Washer: brass; 8 x 7/16 x 0.036 (re-drill to No. 10 (0.093) diam)		97

d. Alphabetical Index for Spring Tape Holder.

Name of part	Part No.	Fig. No.
Bracket	C3466	96
Extension spring	C3467	96
Lockwasher: 8 x 3/64 x 3/64		96
Screw: fil head mach; 8–32 x 5/16		96

e. Alphabetical Index for Power Cabinet.

Name of part	Ref. symbol	Fig. No.
Cord-grip body: polarized (female connector)	R	117
Cord-grip cap: polarized (male connector)	M	117
Fusetron: screw base; 1.6 amp	D	117
Resistor: 40 ohms	L	117
Switch: toggle; DPDT	E	117
Switch: toggle; DPST	F	117

f. Alphabetical Index for Signal Indicator Panel.

Name of part	Ref. symbol	Fig. No.
Light assembly: red; with 120-v, 6-w mazda lamp	B2	23
Light assembly: white; with 120-v, 6-w mazda lamp	B1	23
Switch, push button: DPST	D1, D2, C1, C2	23
Switch, push button: locking; DPDT	E	23

f. Alphabetical Index for Signal Indicator Panel—Continued

Name of part	Ref. Symbol	Fig. No.
Switch, push button: Yaxley; DPDT	F	23

g. Alphabetical Index for Rectifier unit.

Name of part	Ref. symbol	Fig. No.
Capacitor 500-mf		21
Stack, selenium		21

4. Parts Identification Illustrations for Teletypewriter Set AN/TGC–1

Parts used in Teletypewriter Set AN/TGC–1 are illustrated in figures 96 through 117.

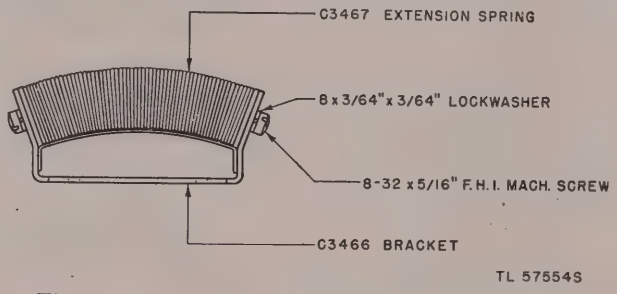

Figure 96. Spring tape holder, parts identification.

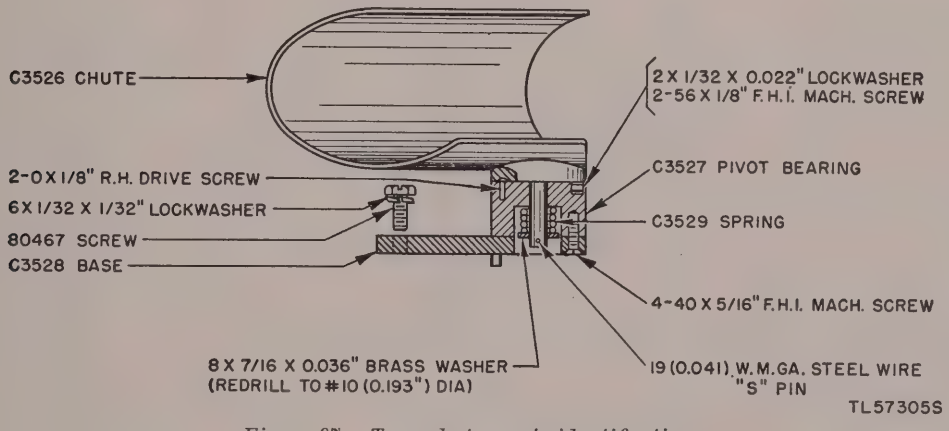
C3526 CHUTE
2-0 X 1/8" R.H. DRIVE SCREW
6 X 1/32 X 1/32" LOCKWASHER
80467 SCREW
C3528 BASE
2 X 1/32 X 0.022" LOCKWASHER
2-56 X 1/8" F.H.I. MACH. SCREW
C3527 PIVOT BEARING
C3529 SPRING
4-40 X 5/16" F.H.I. MACH. SCREW
8 X 7/16 X 0.036" BRASS WASHER
(REDRILL TO #10 (0.193") DIA)
19 (0.041) W.M.GA. STEEL WIRE
"S" PIN
TL57305S

Figure 97. Tape chute, parts identification.

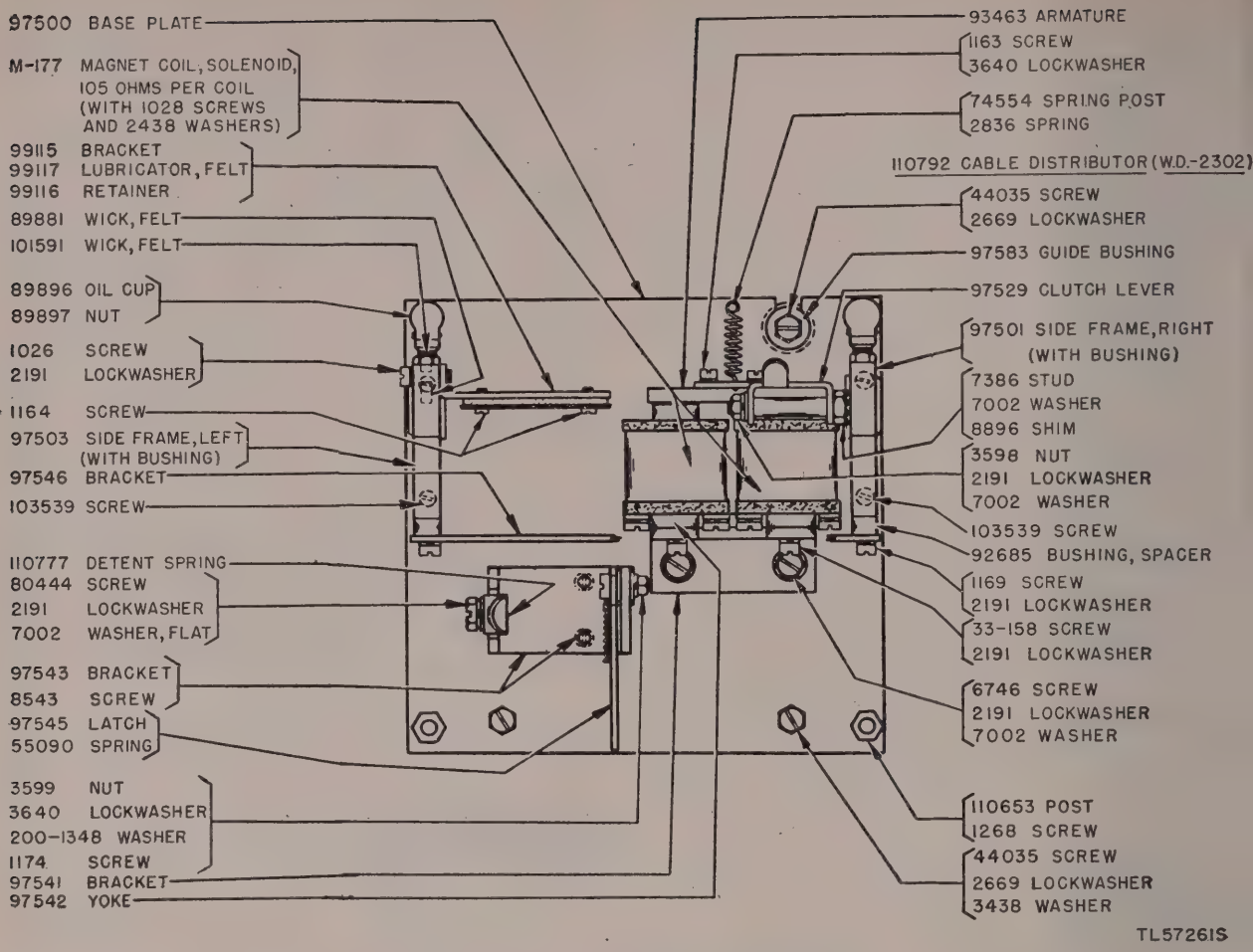

Figure 98. Base plate, parts identification.

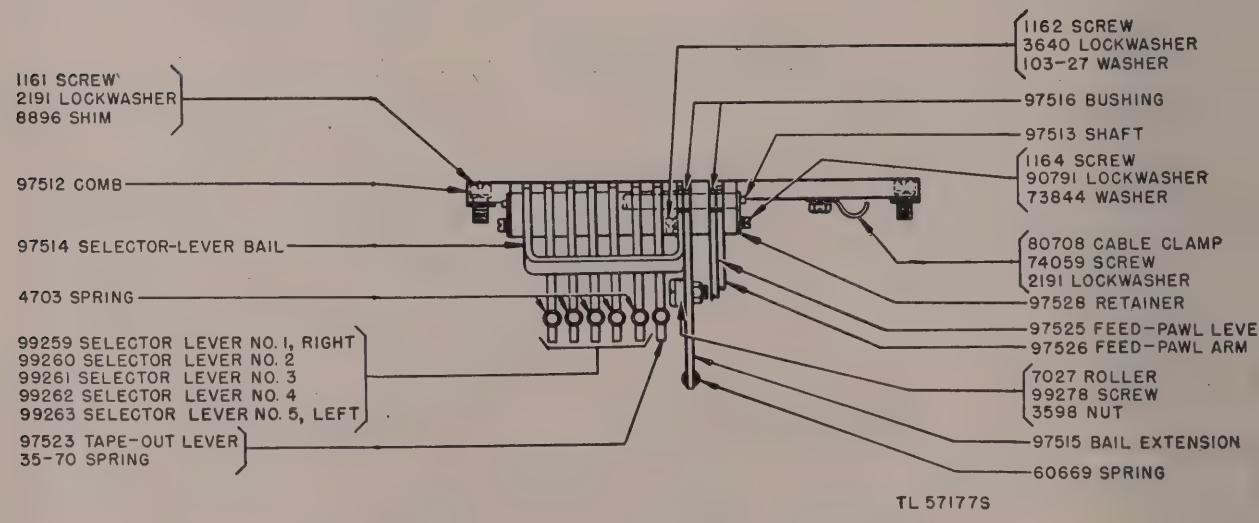

Figure 99. Selector-lever assembly, parts identification.

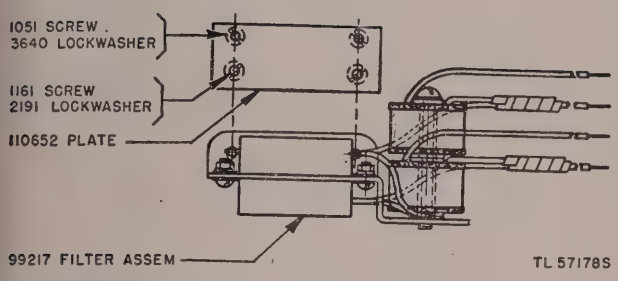

Figure 100. Filter assembly, parts identification.

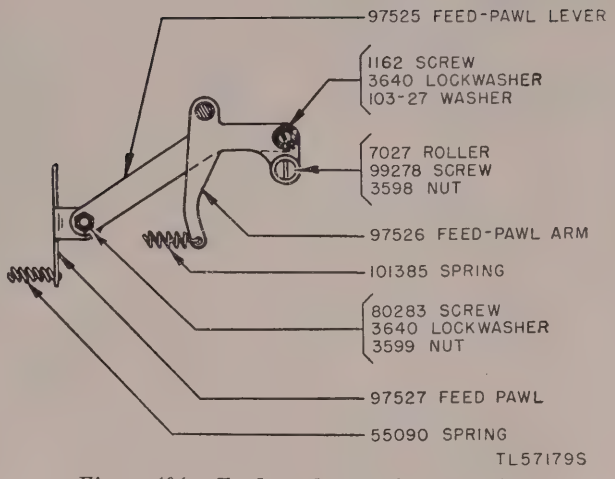

Figure 101. Feed pawl, parts identification.

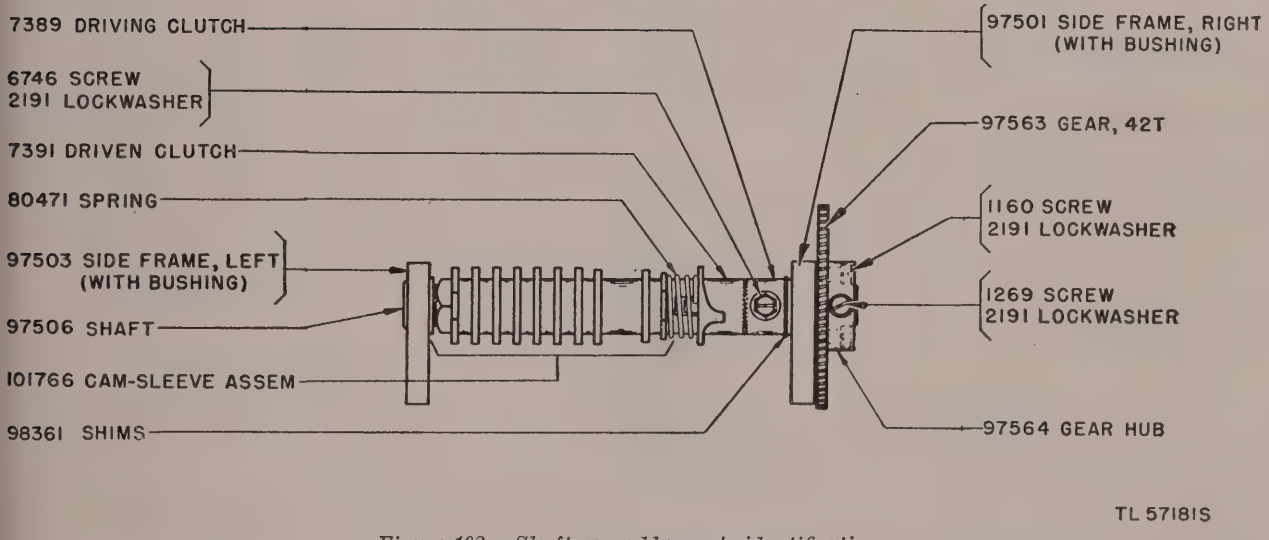

Figure 102. Shaft assembly, parts identification.

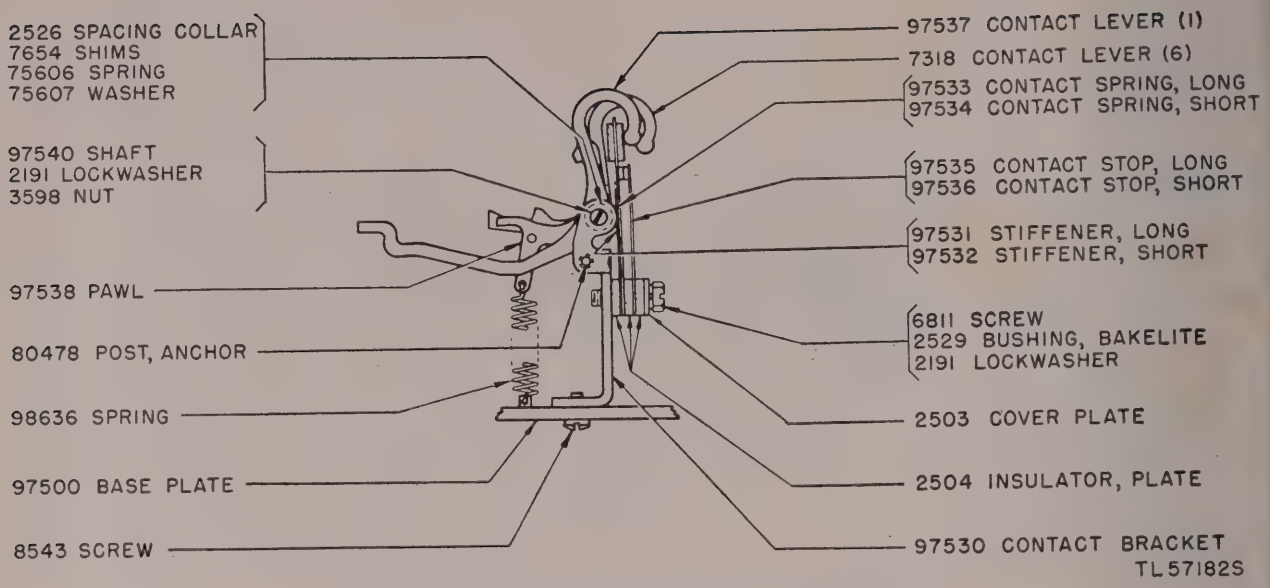

Figure 103. Contact-lever assembly, parts identification.

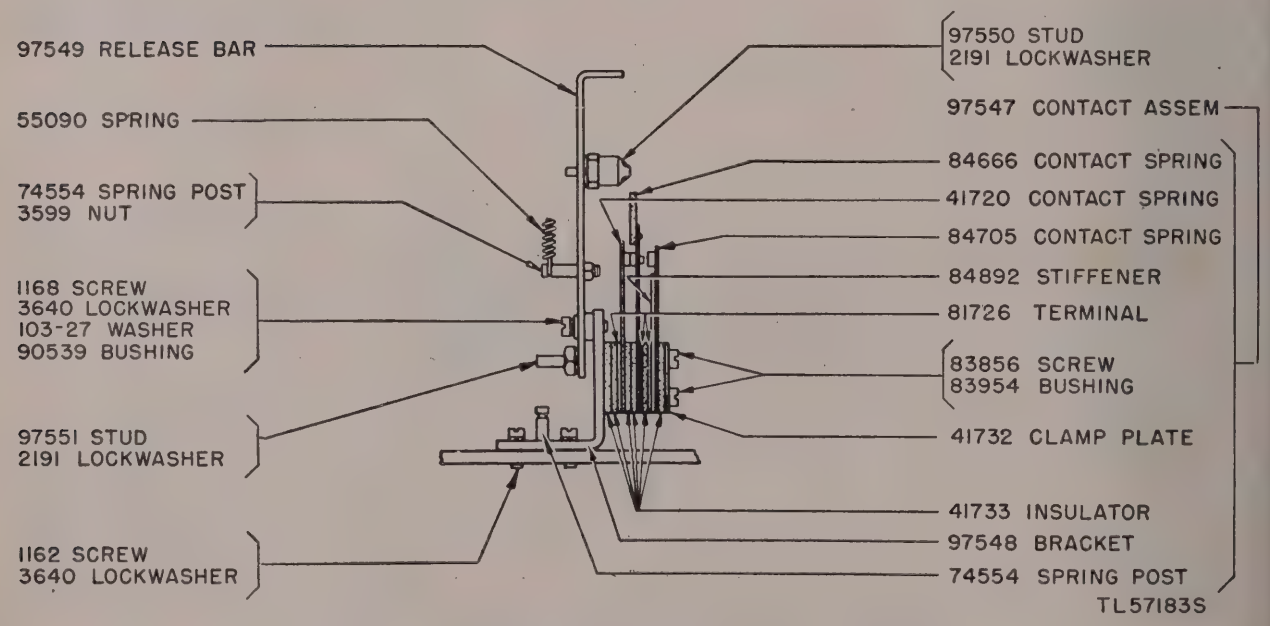

Figure 104. Release-bar contact assembly, parts identification.

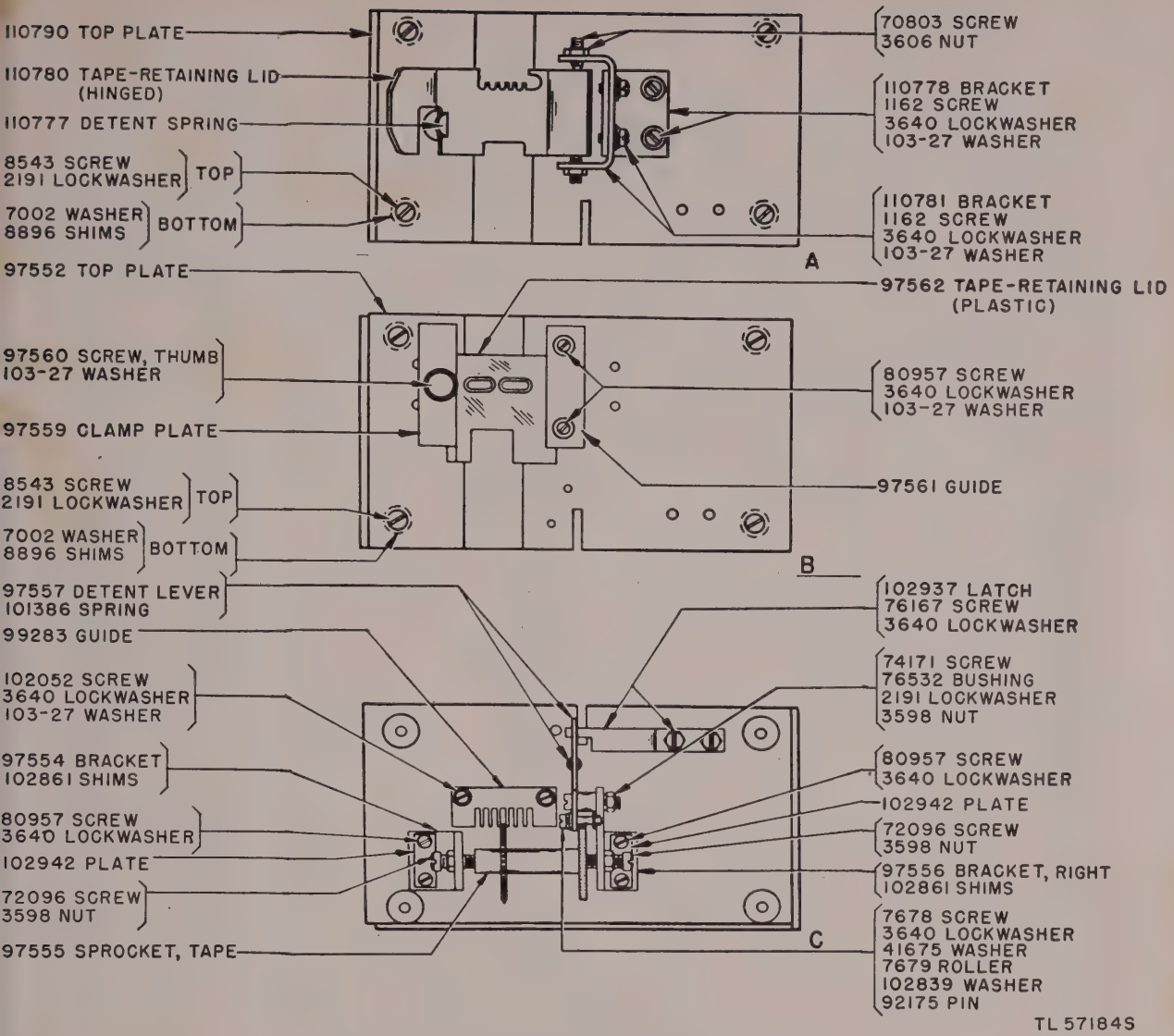

(A)—top view, top plate with hinged tape-retaining lid.
(B)—top view, top plate with plastic tape-retaining lid.
(C)—bottom view.

Figure 105. Top plate, parts identification.

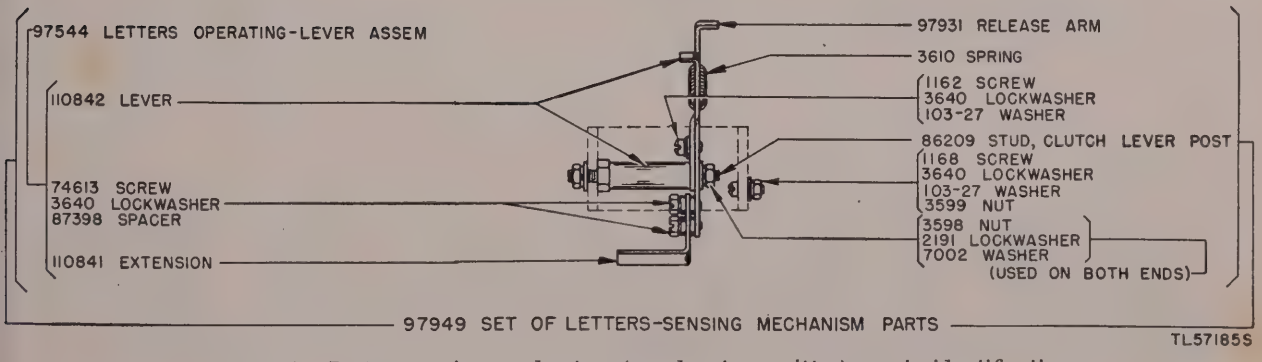

Figure 106. Letters-sensing mechanism (number transmitter), parts identification.

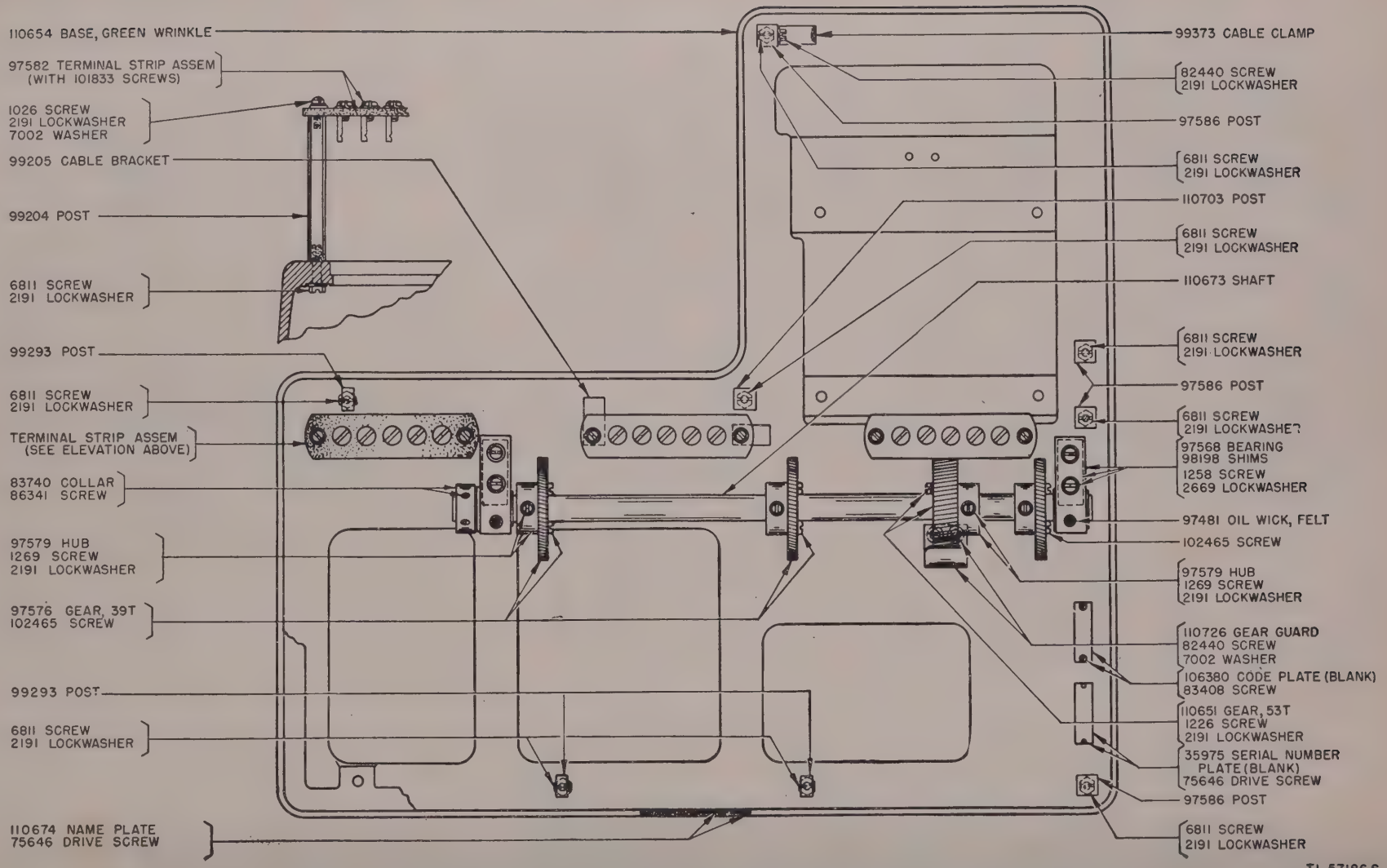
110654 BASE, GREEN WRINKLE
97582 TERMINAL STRIP ASSEM (WITH 101833 SCREWS)
1026 SCREW 2191 LOCKWASHER 7002 WASHER
99205 CABLE BRACKET
99204 POST
6811 SCREW 2191 LOCKWASHER
99293 POST
6811 SCREW 2191 LOCKWASHER
TERMINAL STRIP ASSEM (SEE ELEVATION ABOVE)
83740 COLLAR 86341 SCREW
97579 HUB 1269 SCREW 2191 LOCKWASHER
97576 GEAR, 39T 102465 SCREW
99293 POST
6811 SCREW 2191 LOCKWASHER
110674 NAME PLATE 75646 DRIVE SCREW
99373 CABLE CLAMP
82440 SCREW 2191 LOCKWASHER
97586 POST
6811 SCREW 2191 LOCKWASHER
110703 POST
6811 SCREW 2191 LOCKWASHER
110673 SHAFT
6811 SCREW 2191 LOCKWASHER
97586 POST
6811 SCREW 2191 LOCKWASHER
97568 BEARING 98198 SHIMS 1258 SCREW 2669 LOCKWASHER
97481 OIL WICK, FELT
102465 SCREW
97579 HUB 1269 SCREW 2191 LOCKWASHER
110726 GEAR GUARD 82440 SCREW 7002 WASHER
106380 CODE PLATE (BLANK) 83408 SCREW
110651 GEAR, 53T 1226 SCREW 2191 LOCKWASHER
35975 SERIAL NUMBER PLATE (BLANK) 75646 DRIVE SCREW
97586 POST
6811 SCREW 2191 LOCKWASHER
TL 57186 S

Figure 107. Base (top view), parts identification.

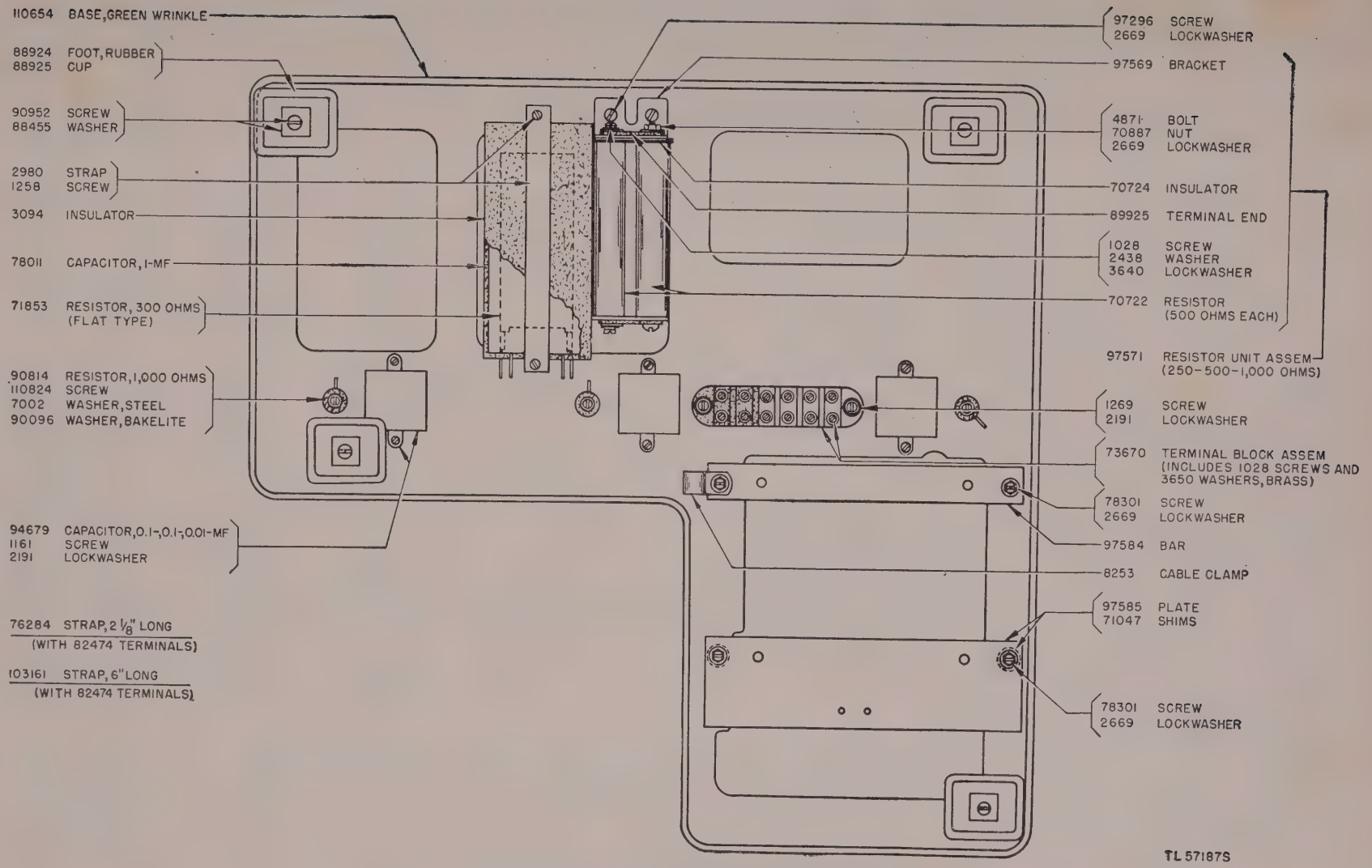

Figure 108. Base (bottom view), parts identification.

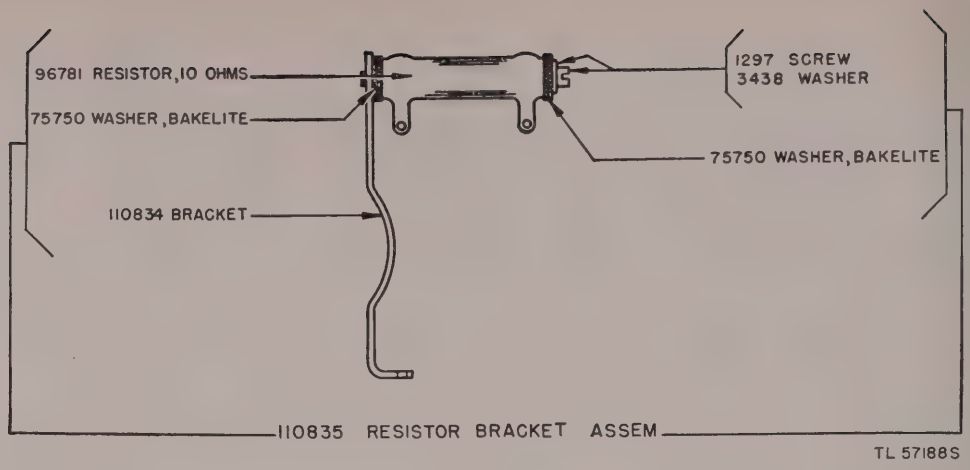

Figure 109. Resistor-bracket assembly, parts identification.

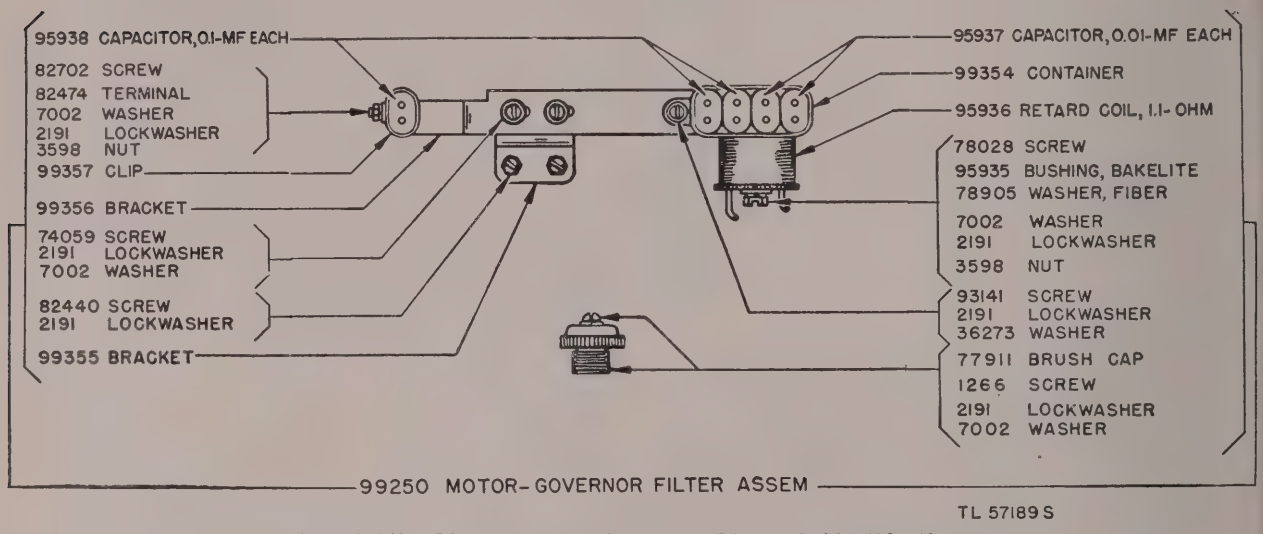

Figure 110. Motor-governor filter assembly, parts identification.

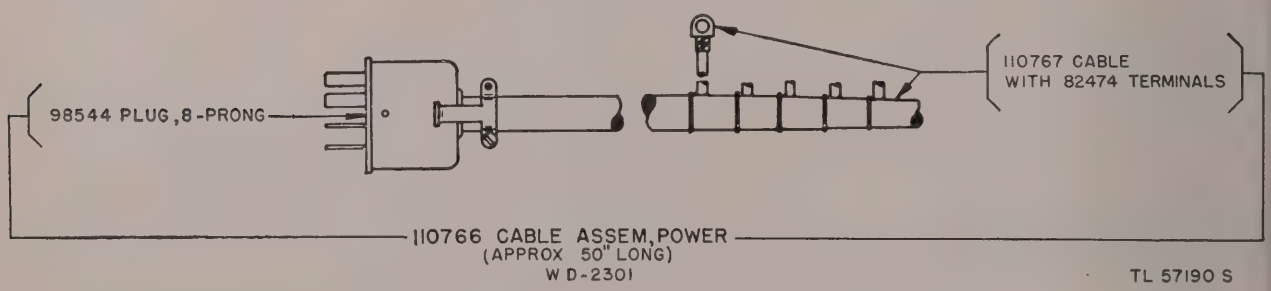

Figure 111. Power-cable assembly, parts identification.

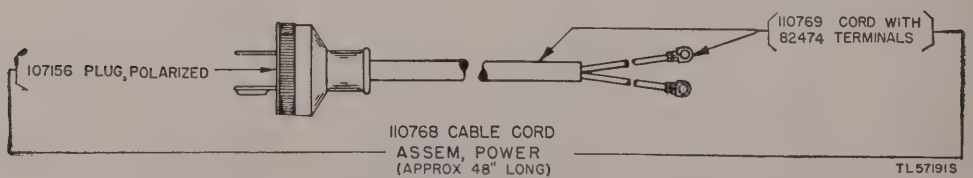

Figure 112. Power-cable cord assembly, parts identification.

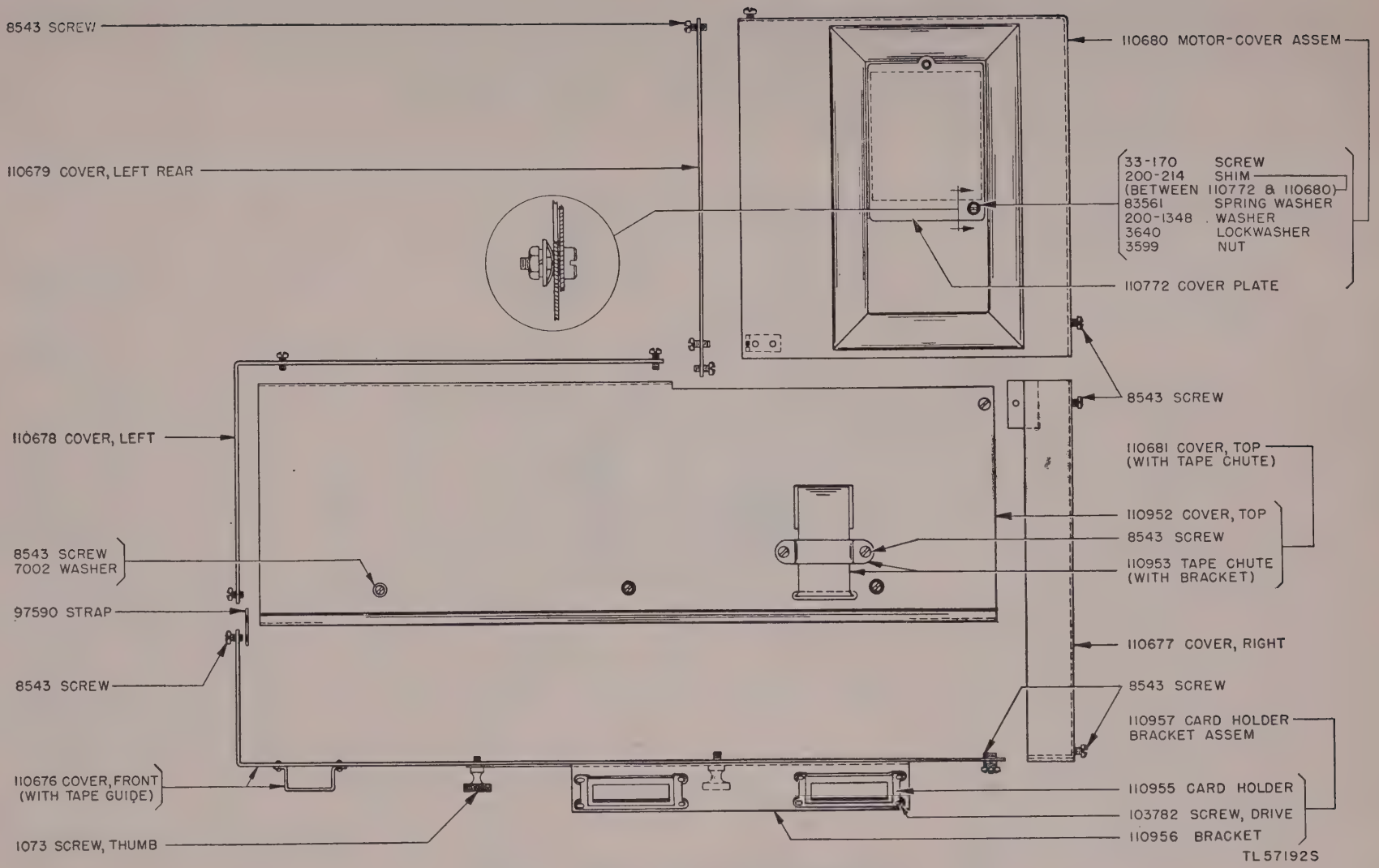

Figure 113. Covers (top view), parts identification.

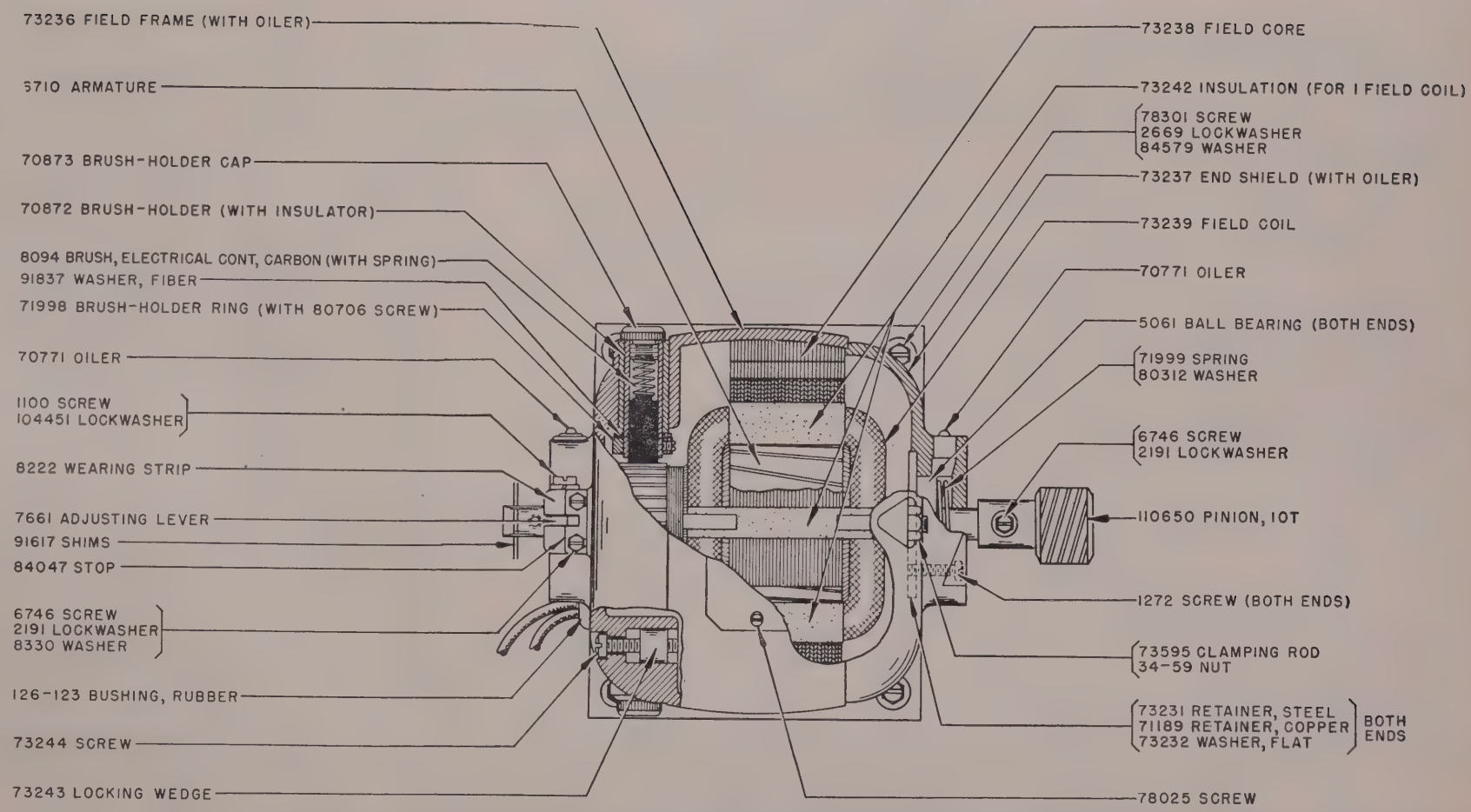

Figure 114. Motor, parts identification.

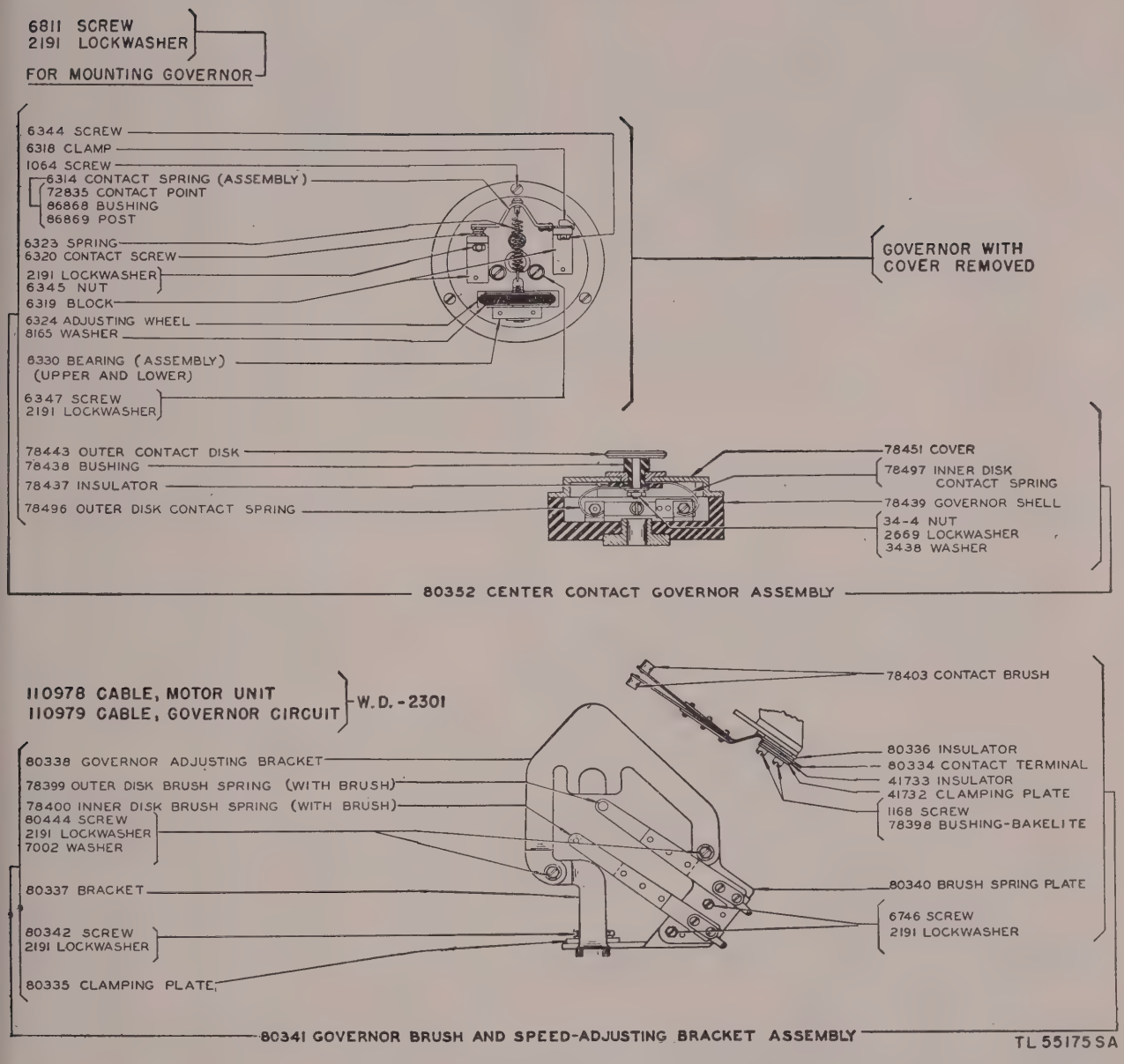

Figure 115. Motor governor, parts identification.

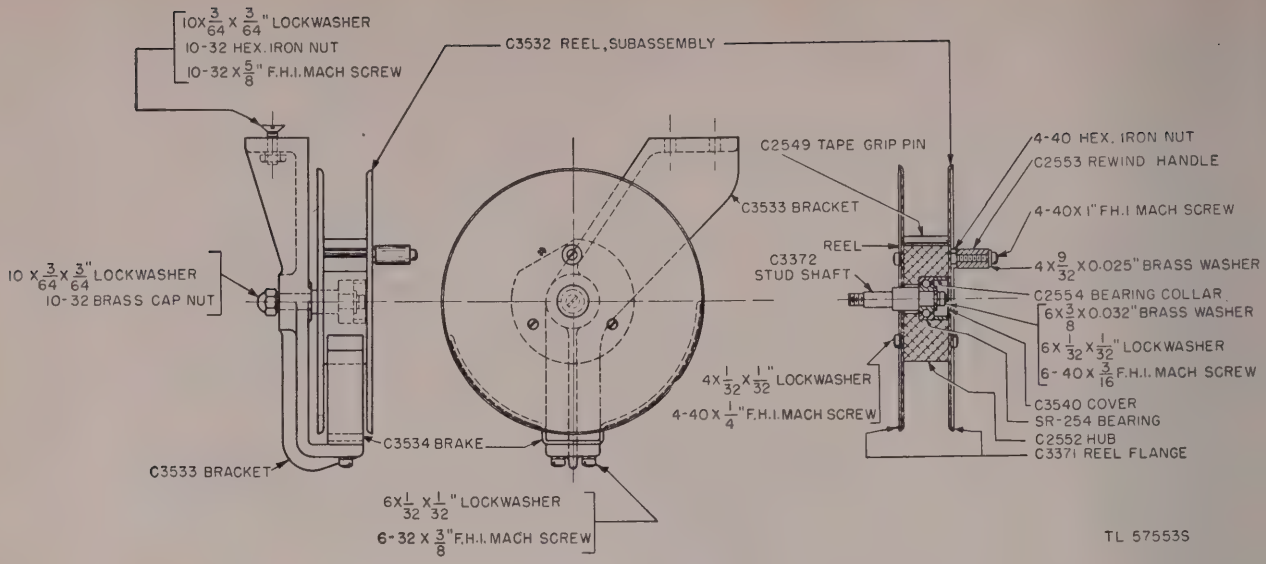
10 x 3/64 x 3/64" LOCKWASHER
10-32 HEX. IRON NUT
10-32 x 5/8" F.H.I. MACH SCREW
C3532 REEL, SUBASSEMBLY
C2549 TAPE GRIP PIN
4-40 HEX. IRON NUT
C2553 REWIND HANDLE
C3533 BRACKET
4-40 X 1" F.H.I MACH SCREW
REEL
C3372 STUD SHAFT
4 X 9/32 X 0.025" BRASS WASHER
C2554 BEARING COLLAR
6 X 3/8 X 0.032" BRASS WASHER
6 X 1/32 X 1/32" LOCKWASHER
6-40 X 3/16 F.H.I. MACH SCREW
10 X 3/64 X 3/64" LOCKWASHER
10-32 BRASS CAP NUT
4 X 1/32 X 1/32" LOCKWASHER
4-40 X 1/4" F.H.I. MACH SCREW
C3540 COVER
SR-254 BEARING
C2552 HUB
C3371 REEL FLANGE
C3534 BRAKE
C3533 BRACKET
6 X 1/32 X 1/32" LOCKWASHER
6-32 X 3/8" F.H.I. MACH SCREW
TL 57553S

Figure 116. Number-tape reel, parts identification.

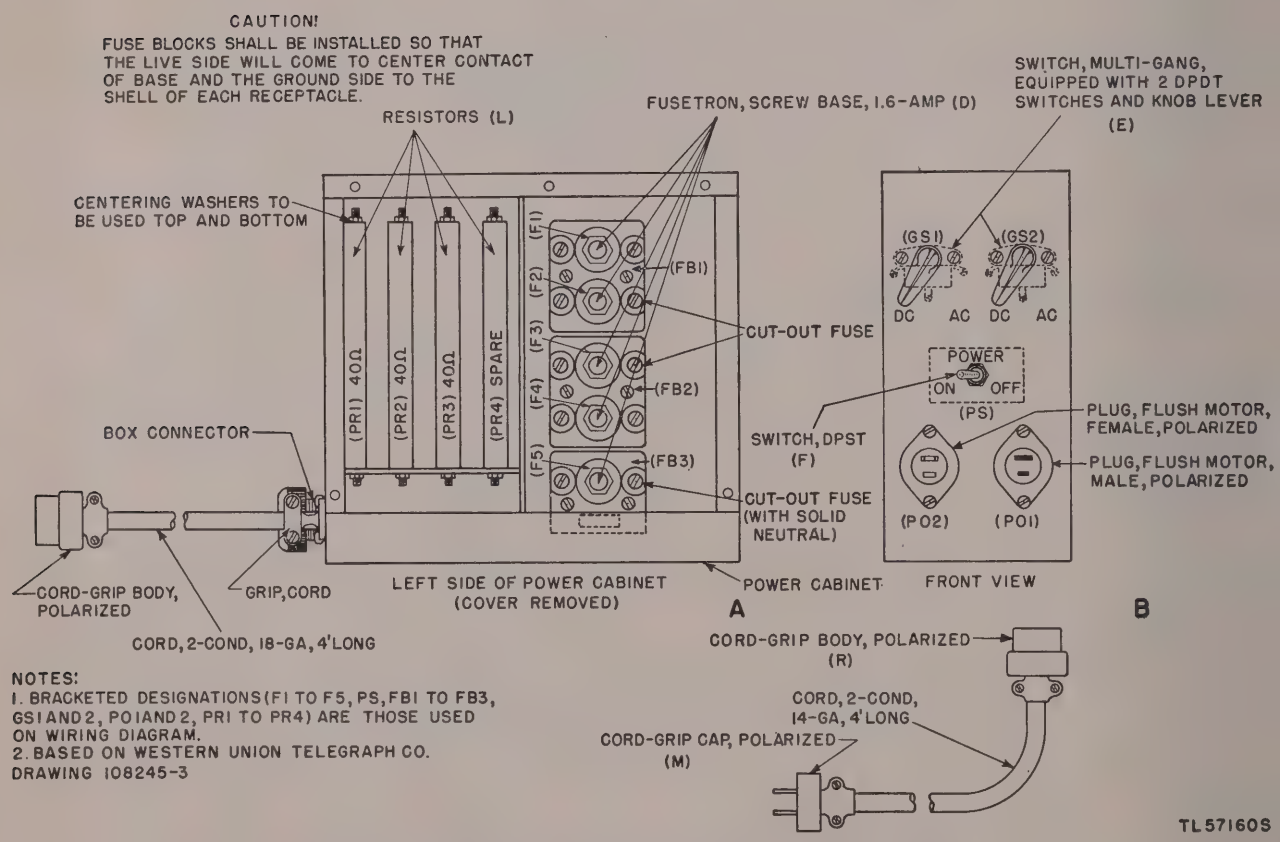

Figure 117. Power cabinet, parts identification and assembly.

5. Numerical Index to Parts Identification Illustrations for Multiple Transmitter Distributor and Base

All parts used in teletypewriter equipment are assigned basic numbers that remain fixed regardless of the equipment in which they are used. The part number is usually the only means of positive identification because of similarity among parts. This is especially true for such items as springs, bolts, screws, nuts, washers, and lockwashers, which look alike but are different in material, tension, etc. The same parts may be used in different assemblies and frequently use the name of the assembly as part of the descriptive name for the particular use. However, some parts with identical names are actually different parts with different numbers. The parts are listed in numerical order with the basic name and description of each part and the illustrations in which each part appears. Only one reference is made to a figure for a given part even though that part appears several times in the illustration.

Part No.	Name of part	Fig. No.
M–177	Magnet coil: 105 ohms	98
33–158	Screw: 6–40 x ½	98
33–170	Screw: shoulder; 4–40	113
34–4	Nut: hex; 10–32	115
34–59	Nut: hex; 10–30	114
35–70	Spring	99
103–27	Washer: steel	99, 101, 104, 105, 106
126–123	Bushing: rubber	114
200–214	Shim	113
200–1348	Washer	98, 113
1026	Screw: 6–40 x ⅜	98, 107
1028	Screw: 4–40 x ¼	98, 108
1051	Screw: 4–40 x ½	100
1064	Screw: mach; 6–32 x ¼	115
1073	Screw: thumb	113
1100	Screw: pilot; ¼–32	114
1160	Screw: 6–40 x 5/16	102
1161	Screw: 6–40 x ¼	99, 100, 108
1162	Screw: 4–40 x ¼	99, 101, 104, 105, 106
1163	Screw: 4–40 x 3/16	98
1164	Screw: 2–56 x 0.188	98, 99
1168	Screw: 4–40 x 5/16	104, 106, 115
1169	Screw: 6–40 x 7/16	98
1174	Screw: shoulder; 4–40	98
1226	Screw: 6–40 x ¾	107
1258	Screw: 10–32 x 1⅜	107, 108
1266	Screw: 6–32 x 7/16	110
1268	Screw: 0.138–40 x 5/16	98
1269	Screw: 6–40 x ½	102, 107, 108
1272	Screw: 6–40 x 1 1/16	114
1297	Screw: 6–40 x 2 7/16	109
2191	Lockwasher	98, 99, 100, 102, 103, 104, 105, 106, 107, 108, 114, 115
2438	Washer	98, 108
2503	Cover plate	103
2504	Insulator: plate	103
2526	Bushing: spacer	103
2529	Bushing: bakelite	103
2669	Lockwasher	98, 107, 108, 114, 115
2836	Spring: extension	98
2980	Strap	108
3094	Insulator	108
3438	Washer: flat	98, 109, 115
3598	Nut: hex; 6–40	98, 99, 101, 103, 105, 106, 110
3599	Nut: hex; 4–40	98, 101, 104, 106, 113
3606	Nut: hex; 6–40	105
3610	Spring: extension	106
3640	Lockwasher	98, 100, 101, 104, 105, 106, 108, 113
3650	Washer	108
4703	Spring: extension	99
4871	Bolt: 3/16–24 x 4	108
5061	Ball bearing	114
6314	Contact spring (assem)	115
6318	Clamp	115
6319	Block	115
6320	Contact screw	115
6323	Spring: extension	115
6324	Adjusting wheel	115
6330	Bearing (assem)	115
6344	Screw: mach; 6–32 x 11/32	115
6345	Nut: hex; 6–32	115
6708	Motor, series: 1/25-hp 110-v, 60-cycle, a-c (GE model 5BA65AA77)	114
6710	Armature	114
6746	Screw: mach; 6–40 x 5/16	98, 102, 114, 115
6811	Screw: 6–40 x ⅝	103, 107
7002	Washer: flat	98, 105, 106, 107, 108, 110, 113, 115
7027	Roller	99, 101
7318	Contact lever	103
7386	Stud	98
7389	Driving clutch	102
7391	Driven clutch	102
7654	Shim	103
7661	Adjusting lever	114

Part No.	Name of part	Fig. No.
7678	Screw: special; 4–40	105
7679	Roller: lever	105
8094	Brush (with spring): electrical contact; carbon	114
8165	Washer	115
8222	Wearing strip	114
8253	Cable clamp	108
8330	Washer	114
8543	Screw: 6–40 x ¼	98, 103, 105, 113
8896	Shim	98, 99, 105
35975	Serial number plate: (blank)	107
36273	Washer	110
41675	Washer: flat	105
41720	Contact spring	104
41732	Clamp plate	104, 115
41733	Insulator	104, 115
44035	Screw: 10–32 x 5/16	98
55090	Spring: extension	98, 101, 104
60669	Spring: extension	99
70722	Resistor: 500 ohms	108
70724	Insulator	108
70771	Oiler	114
70803	Screw: pivot; 6–40	105
70872	Brush holder (with insulator)	114
70873	Brush-holder cap	114
70887	Nut: hex; 3/16–24	108
71047	Shim	108
71189	Retainer: copper	114
71853	Resistor: 300 ohms	108
71998	Brush-holder ring	114
71999	Spring: compression	114
72096	Screw: pivot; 6–40	105
72835	Contact point	115
73231	Retainer: steel	114
73232	Washer: flat	114
73236	Field frame (with 70771 oiler)	114
73237	End shield (with 70771 oiler)	114
73238	Field core	114
73239	Field coil	114
73242	Insulation (for one 73239 field coil).	114
73243	Locking wedge	114
73244	Screw: 10–32 x 7/8	114
73595	Clamping rod	114
73670	Terminal block (assem)	108
73844	Washer: flat	99
74059	Screw: mach; 6–40 x 7/32	99, 110
74171	Screw: eccentric; 6–40	105
74554	Spring post	98, 104
74613	Screw: 4–40 x ¼	106
75606	Spring: compression	103
75607	Washer: flat	103
75646	Drive screw	107
75750	Washer: bakelite	109
76167	Screw: 4–40 x 5/16	105
76284	Strap: 2⅛″ long (with 82474 terminals).	108
76532	Bushing	105
77911	Brush cap	110
78011	Capacitor: 1-mf	108
78025	Screw: 4–48 x 3/16	114
78028	Screw: 6–40 x 15/16	110
78301	Screw: 10–32 x 5/8	108, 114
78398	Bushing: bakelite	115
78399	Outer disk brush spring (with brush).	115
78400	Inner disk brush spring (with brush).	115
78403	Contact brush	115
78437	Insulator	115
78438	Bushing: bakelite	115
78439	Governor shell	115
78443	Outer contact disk	115
78451	Governor cover	115
78496	Outer disk contact spring	115
78497	Inner disk contact spring	115
78905	Washer: fiber	110
80283	Screw: shoulder; 4–40	101
80312	Washer: flat	114
80334	Contact terminal	115
80335	Clamping plate	115
80336	Insulator	115
80337	Bracket	115
80338	Governor adjusting bracket	115
80340	Brush spring plate	115
80341	Governor brush and speed adjusting bracket (assem).	115
80342	Screw: 6–40 x 23/64	115
80352	Center contact governor (assem).	115
80444	Screw: 6–40 x ¼	98, 115
80471	Spring: clutch	102
80478	Post: anchor	103
80706	Screw: 6–40 x 3/16	114
80708	Cable clamp	99
80957	Screw: hex; 4–40 x ¼	105
81726	Terminal	104
82440	Screw: 6–40 x 7/16	107, 110
82474	Terminal	110, 111, 112
82702	Screw: 6–40 x 9/32	110
83408	Screw: 4–40 x 3/16	107
83561	Spring washer	113
83740	Collar	107
83856	Screw: 4–40 x 11/16	104
83954	Bushing	104
84047	Stop	114
84579	Washer: flat	114
84666	Contact spring	104
84705	Contact spring	104
84892	Stiffener	104
86209	Clutch lever post stud	106
86341	Screw: set; 10–32	107
86868	Insulator bushing: bakelite	115
86869	Post	115
87398	Spacer	106
88455	Washer	108
88924	Foot: rubber	108

Part No.	Name of part	Fig. No.
88925	Cup	108
89881	Wick: felt	98
89896	Oil cup	98
89897	Nut: hex; 10–32	98
89925	Terminal end	108
90096	Washer: bakelite	108
90539	Bushing	104
90791	Lockwasher	99
90814	Resistor: 1,000 ohms	108
90952	Screw: shoulder; ¼–20	108
91617	Shim	114
91837	Washer: fiber	114
92175	Pin: clevis	105
92685	Bushing: spacer	98
93141	Screw: 6–40 x 3/32	110
93463	Armature: electromagnet	98
94679	Capacitor: 0.1–0.1–0.01 mf	108
95935	Bushing: bakelite	110
95936	Retard coil: 1.1 ohms	110
95937	Capacitor: 0.01 mf	110
95938	Capacitor: 0.1 mf	110
96781	Resistor: 10 ohms	109
97296	Screw: 10–32 x 5/16	108
97481	Oil wick: felt	107
97500	Base plate	98, 103
97501	Side frame: right (with bushing).	98, 102
97503	Side frame: left (with bushing).	98, 102
97506	Shaft	102
97512	Comb	99
97513	Shaft	99
97514	Selector-lever bail	99
97515	Bail extensions	99
97516	Bushing	99
97523	Tape-out lever	99
97525	Feed-pawl lever	99, 101
97526	Feed-pawl arm	99, 101
97527	Feed pawl	101
97528	Retainer	99
97529	Clutch lever	98
97530	Contact bracket	103
97531	Stiffener: long	103
97532	Stiffener: short	103
97533	Contact spring: long	103
97534	Contact spring: short	103
97535	Contact stop: long	103
97536	Contact stop: short	103
97537	Contact lever	103
97538	Pawl: ratchet	103
97540	Shaft	103
97541	Bracket	98
97542	Yoke	98
97543	Bracket	98
97544	Letters-operating lever (assem).	106
97545	Latch: lever	98
97546	Bracket	98
97547	Contact (assem)	104
97548	Bracket	104
97549	Release bar	104
97550	Stud	104
97551	Stud	104
97552	Top plate	105
97554	Bracket	105
97555	Sprocket: tape	105
97556	Bracket: right	105
97557	Detent lever	105
97559	Clamp plate	105
97560	Screw: thumb; 4–40	105
97561	Guide	105
97562	Tape retaining lid (plastic)	105
97563	Gear: 42T	102
97564	Gear hub	102
97568	Bearing	107
97569	Bracket	108
97571	Resistor unit (assem: 250–500–1,000 ohms.	108
97576	Gear: 39T	107
97579	Hub	107
97582	Terminal strip (assem)	107
97583	Guide bushing	98
97584	Bar	108
97585	Plate	108
97586	Post	107
97590	Strap	113
97931	Release arm	106
97949	Set of letters-sensing mechanism parts.	106
98198	Shim	107
98361	Shim	102
98544	Plug: 8-prong	111
98636	Spring: extension	103
99115	Bracket	98
99116	Retainer	98
99117	Lubricator: felt	98
99204	Post	107
99205	Cable bracket	107
99217	Filter (assem)	100
99250	Motor-governor filter (assem)	110
99259	Selector lever No. 1, right	99
99260	Selector lever No. 2	99
99261	Selector lever No. 3	99
99262	Selector lever No. 4	99
99263	Selector lever No. 5	99
99278	Screw: shoulder; 6–40	101
99283	Guide: punch	103
99293	Post	107
99354	Container	110
99355	Bracket	110
99356	Bracket	110
99357	Clip	110
99373	Cable clamp	107
101385	Spring: extension	101
101386	Spring: extension	105
101591	Wick: felt	98
101766	Cam sleeve (assem)	102
101833	Screw: 8–32 x 5/16	107

Part No.	Name of part	Fig. No.
102052	Screw: 4–40 x 3/32	105
102465	Screw: 6–40 x 37/64	107
102839	Washer: flat	105
102861	Shim	105
102937	Latch	105
102942	Plate	105
103161	Strap: 6″ long (with 82474 terminals).	108
103539	Screw: 6–40 x 3/8	98
103782	Screw: drive	113
104451	Lockwasher	114
106380	Code plate (blank)	107
107156	Plug: polarized	112
110650	Pinion: 10T	114
110651	Gear: 53T	107
110652	Plate	100
110653	Post	98
110654	Base: green wrinkle	107, 108
110673	Shaft	107
110676	Cover: front	113
110677	Cover: right	113
110678	Cover: left	113
110679	Cover: left rear	113
110680	Motor cover (assem)	113
110681	Cover: top (with tape chute)	113
110703	Post	107
110726	Gear guard	107
110766	Power cable (assem)	111
110767	Cable	111
110768	Cable (assem)	112
110769	Cord	112
110772	Cover plate	113
110777	Detent spring	98, 105
110778	Bracket	105
110780	Tape retaining lid (hinged)	105
110781	Bracket	105
110790	Top plate	105
110792	Cable distributor	98
110824	Screw: 6–40 x 1 13/16	108
110834	Bracket	109
110835	Resistor bracket (assem)	109
110841	Extension	106
110842	Lever	106
110952	Cover top	113
110953	Tape chute (with bracket)	113
110955	Card holder	113
110956	Bracket	113
110957	Card holder bracket (assem)	113
110978	Cable: motor unit	115
110979	Cable: governor circuit	115

6. Numerical Index to Parts Identification Illustrations for Tape Winder, Number-Tape Reel, Tape Chute, and Spring Tape Holder

The following index to the parts identification illustrations for the tape winder, the number-tape reel, the tape chute, and the spring tape holder lists the parts for each item according to the numerical order of the manufacturer's part numbers.

Note. For a listing of parts for the power cabinet, the signal indicator panel, and the rectifier unit, see paragraph 3 of this appendix (an alphabetical index). For a listing of equipment drawer parts, refer to figure 19.

a. Numerical Index for the Tape Winder.

Part No.	Name of part	Fig. No.
AH & H20992	Toggle switch	80, 81
C2357	Core	80
C2358	Hub	80
C2359	Nut	80
C3362	Mounting flange	80, 81
C3494	Tape reel (assem)	80
C3495	Tape-reel shaft (assem)	80
C3496	Clutch shaft (assem)	81
C3497	Driven gear (assem)	80
C3498	Driving gear (assem)	81
C3499	Shaft housing	80, 81
C3500	Bearing cap	80, 81
C3501	Cover plate	81
C3502	Switch cover	80
C3504	Bracket	80
C3505	Bracket	80, 81
C3506	Sleeve roller	80, 81
C3507	Reel flange	80
C3509	Driving shaft	81
C3510	Clutch disk	81
C3511	Extruded washer	81
C3512	Clutch spring	81
C3513	Shaft collar	81
C3514	Gear hub	80
C3515	Gear	80
C3516	Sleeve bearing	81
C3530	Lamp bracket	80
C3531	Name plate	81
C3535	Motor bracket	81
FI–300	Sleeve bearing	81
FI–503	Sleeve bearing	80

a. Numerical Index for the Tape Winder —Continued

Part No.	Name of part	Fig. No.
FUE–51–2	Tape-winder motor	81
H–2448–R	Spiral gear (clutch-shaft gear)	81
I–304–7	Sleeve bearing	81
IF–24	Filter	81
SC–37	Locking collar, tape-reel shaft	80
1	Coupling (¼″ x 5/16″ diam bores)	81
2–50	Terminal strip	80, 81
31	Terminal lug	81
42–TE–064	Stop nut	81
2364	Cable clamp	80
3101	Box connector	81
3661	Bushing spacer	81
5381	Bushing insulator	81
7057	Plug cap	81
72883	Function washer	81
193296	Lampholder	80, 81
194120	Lamp	80

b. Numerical Index for Number-tape Reel.

Part No.	Name of part	Fig. No
C2549	Tape grip pin	116
C2552	Hub	116
C2553	Rewind handle	116
C2554	Bearing collar	116
C3371	Reel flange	116

b. Numerical Index for Number-tape Reel —Continued

Part No.	Name of part	Fig. No.
C3372	Reel-stud shaft	116
C3532	Reel (assem)	116
C3533	Bracket	116
C3534	Brake	116
C3540	Cover	116
SR254	Bearing	116

c. Numerical Index for Tape Chute.

Part No.	Name of part	Fig. No.
C3526	Chute	97
C3527	Pivot bearing	97
C3528	Base	97
C3529	Spring	97
80467	Screw: 6–40 x ⅜″ hex. head machine.	97

d. Numerical Index for Spring Tape Holder.

Part No.	Name of part	Fig. No.
C3466	Bracket	96
C3467	Extension spring	96

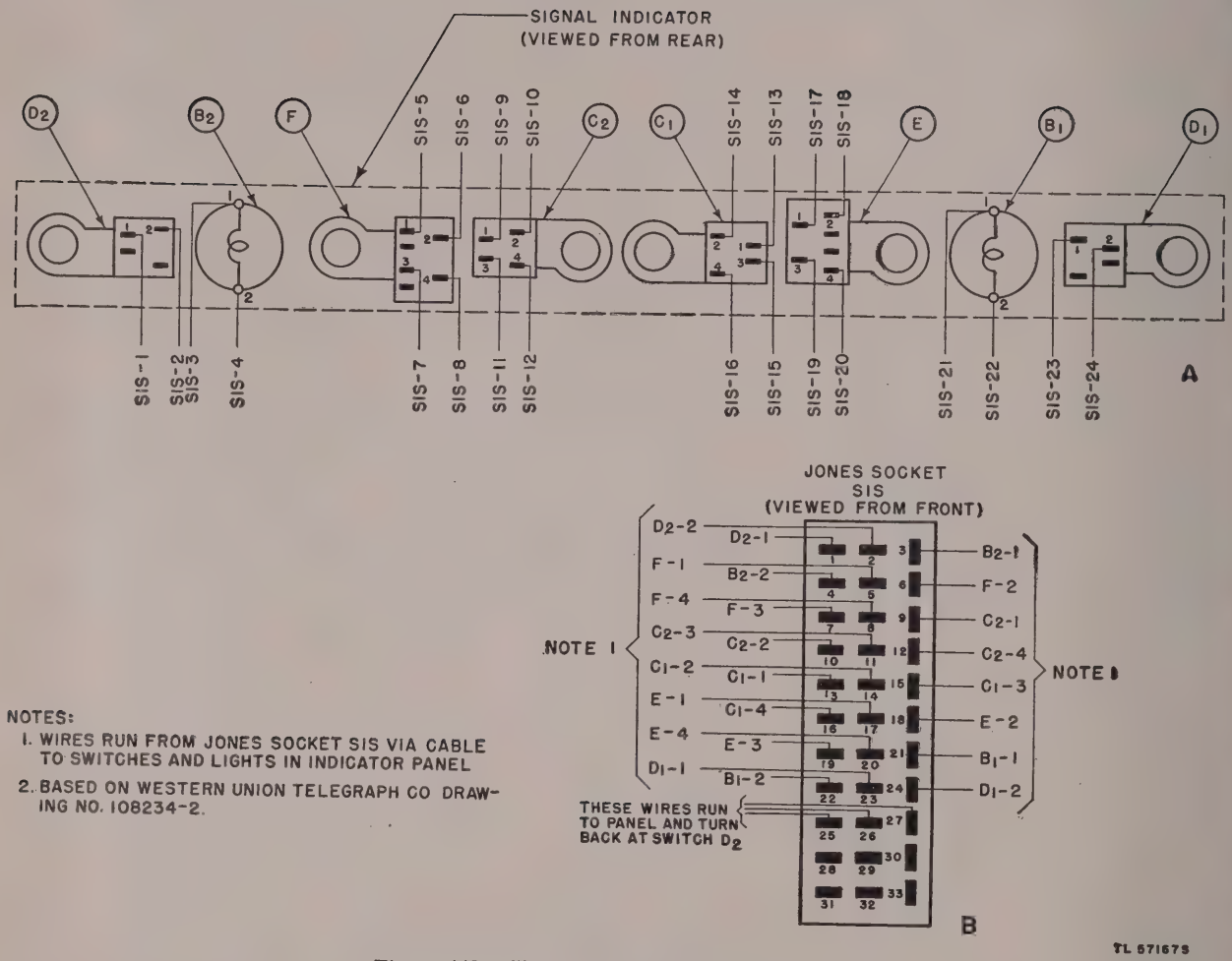

NOTES:

1. WIRES RUN FROM JONES SOCKET SIS VIA CABLE TO SWITCHES AND LIGHTS IN INDICATOR PANEL
2. BASED ON WESTERN UNION TELEGRAPH CO DRAWING NO. 108234-2.

Figure 118. Signal indicator, wiring diagram.

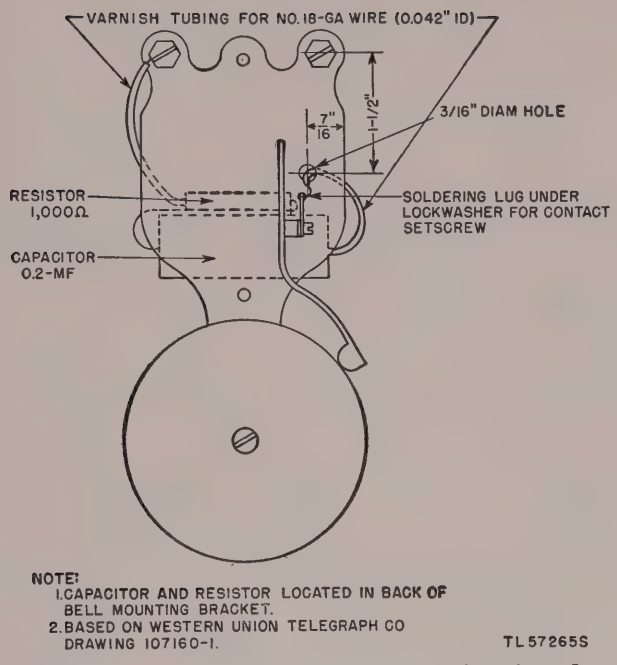
VARNISH TUBING FOR NO. 18-GA WIRE (0.042" ID)
3/16" DIAM HOLE
7/16
1-1/2"
RESISTOR 1,000Ω
CAPACITOR 0.2-MF
SOLDERING LUG UNDER LOCKWASHER FOR CONTACT SETSCREW
NOTE:
1. CAPACITOR AND RESISTOR LOCATED IN BACK OF BELL MOUNTING BRACKET.
2. BASED ON WESTERN UNION TELEGRAPH CO DRAWING 107160-1.
TL57265S

Figure 119. Method of mounting and wiring of spark killer to alarm bell contacts.

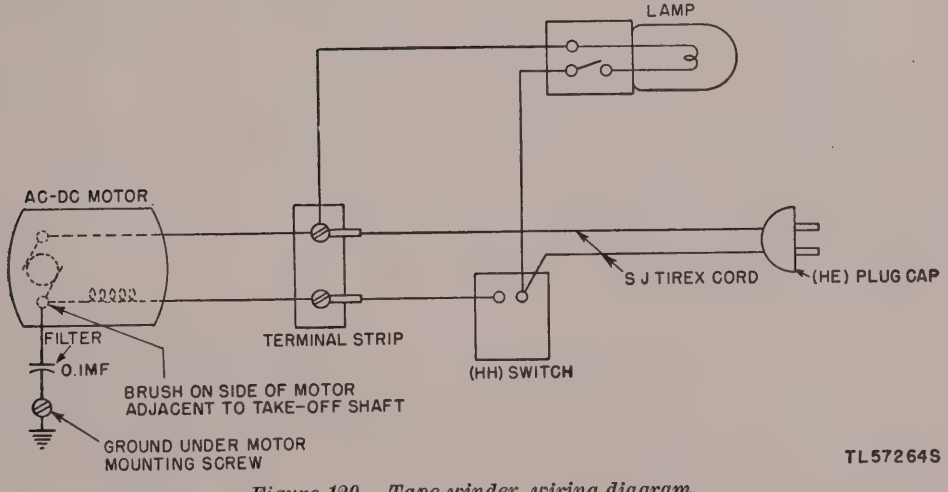

Figure 120. Tape winder, wiring diagram.

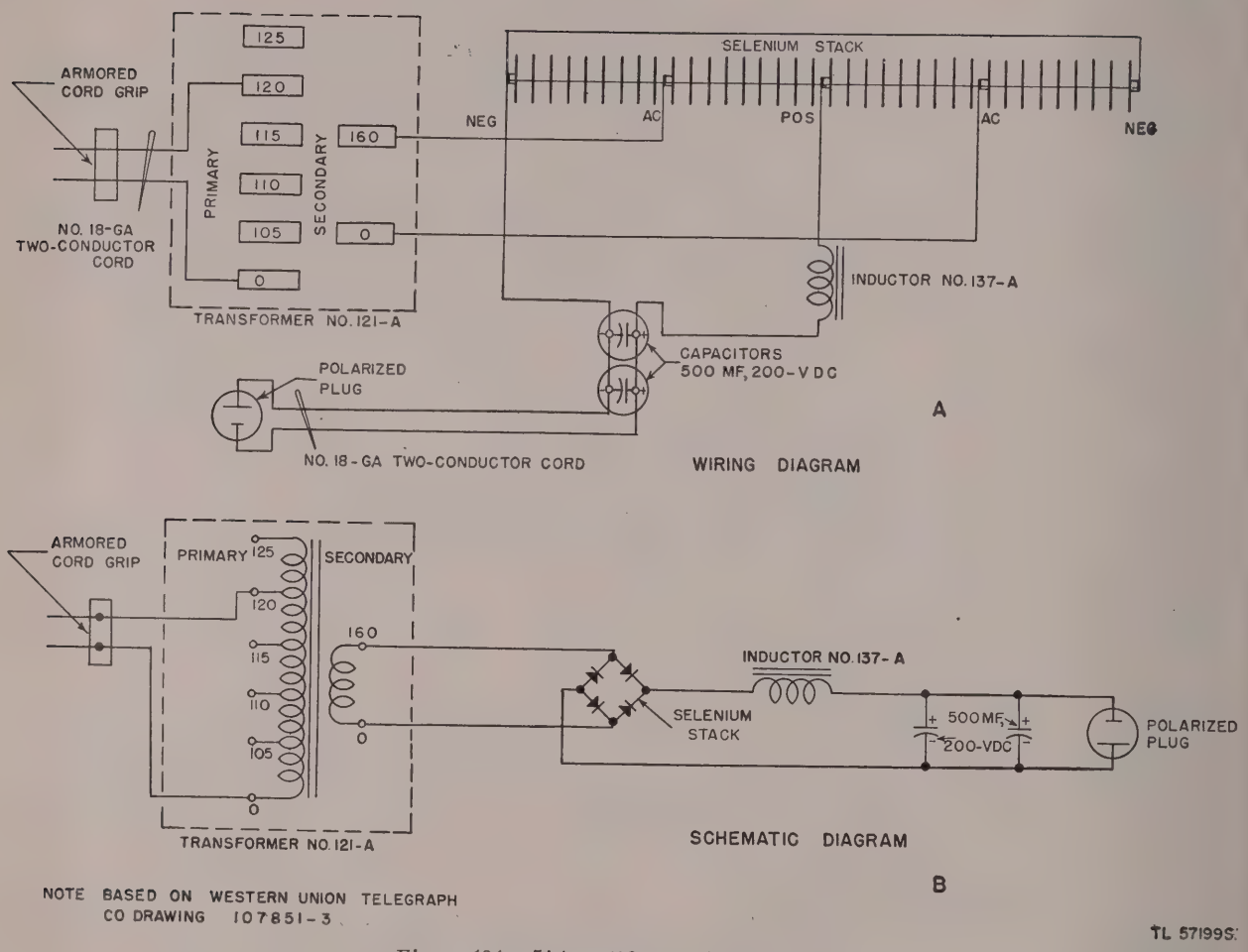

Figure 121. 54A rectifier, wiring diagram.

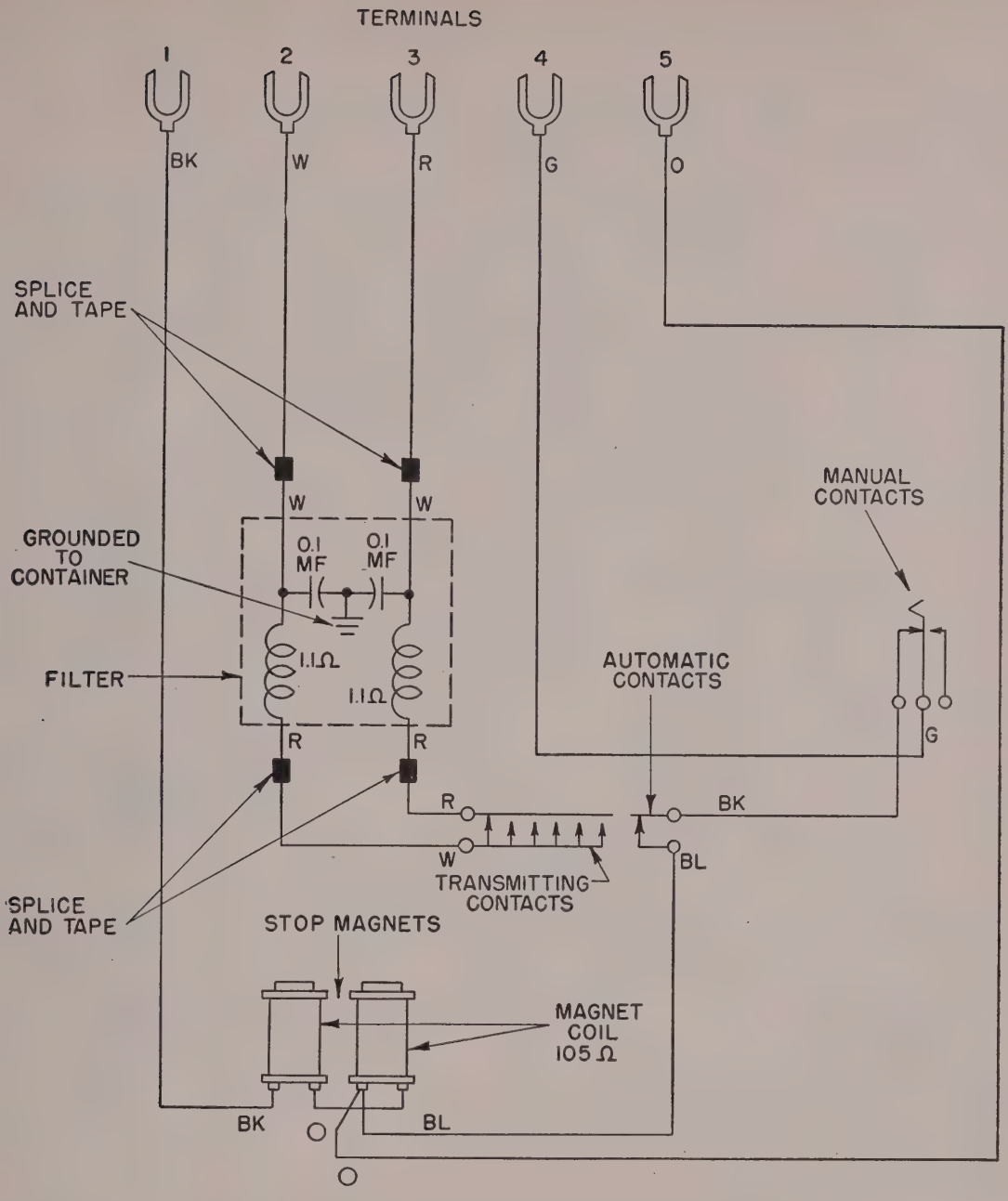

NOTES:

1. WIRE COLOR CODE

CODE	SOLID COLOR OR TRACER IN WHITE WIRE
BK	BLACK
W	WHITE
R	RED
G	GREEN
O	ORANGE
BL	BLUE

2. BASED ON TELETYPE CORP DRAWING WD-2302-B.

TL 57268S

Figure 122. Multiple transmitter (MXD8, MXD9), wiring diagram.

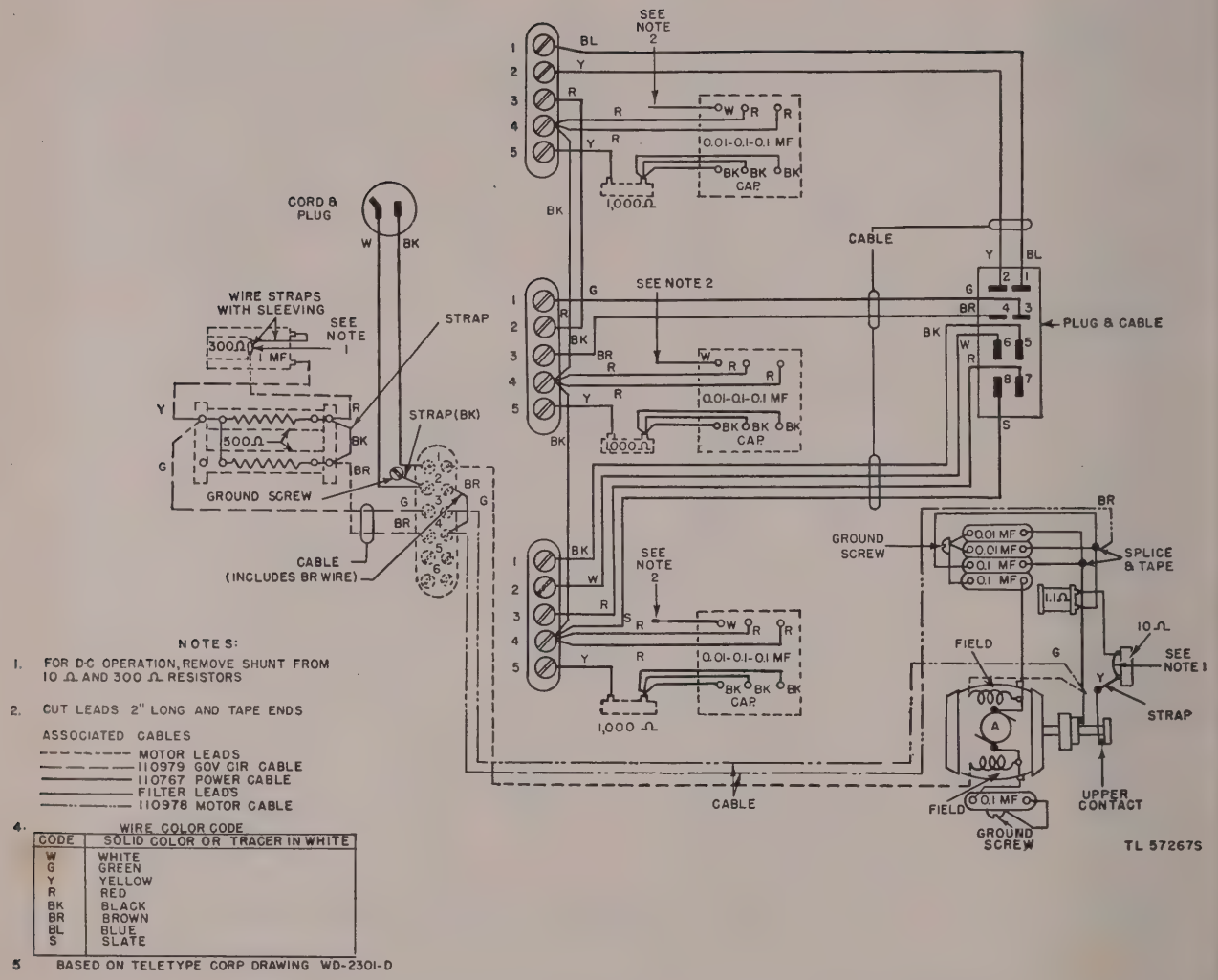

NOTES:

1. FOR D-C OPERATION, REMOVE SHUNT FROM 10 Ω AND 300 Ω RESISTORS
2. CUT LEADS 2" LONG AND TAPE ENDS

ASSOCIATED CABLES

- MOTOR LEADS
- 110979 GOV CIR CABLE
- 110767 POWER CABLE
- FILTER LEADS
- 110978 MOTOR CABLE

4. WIRE COLOR CODE

CODE	SOLID COLOR OR TRACER IN WHITE
W	WHITE
G	GREEN
Y	YELLOW
R	RED
BK	BLACK
BR	BROWN
BL	BLUE
S	SLATE

5 BASED ON TELETYPE CORP DRAWING WD-2301-D

Figure 123. Multiple transmitter distributor base MXB8, wiring diagram.

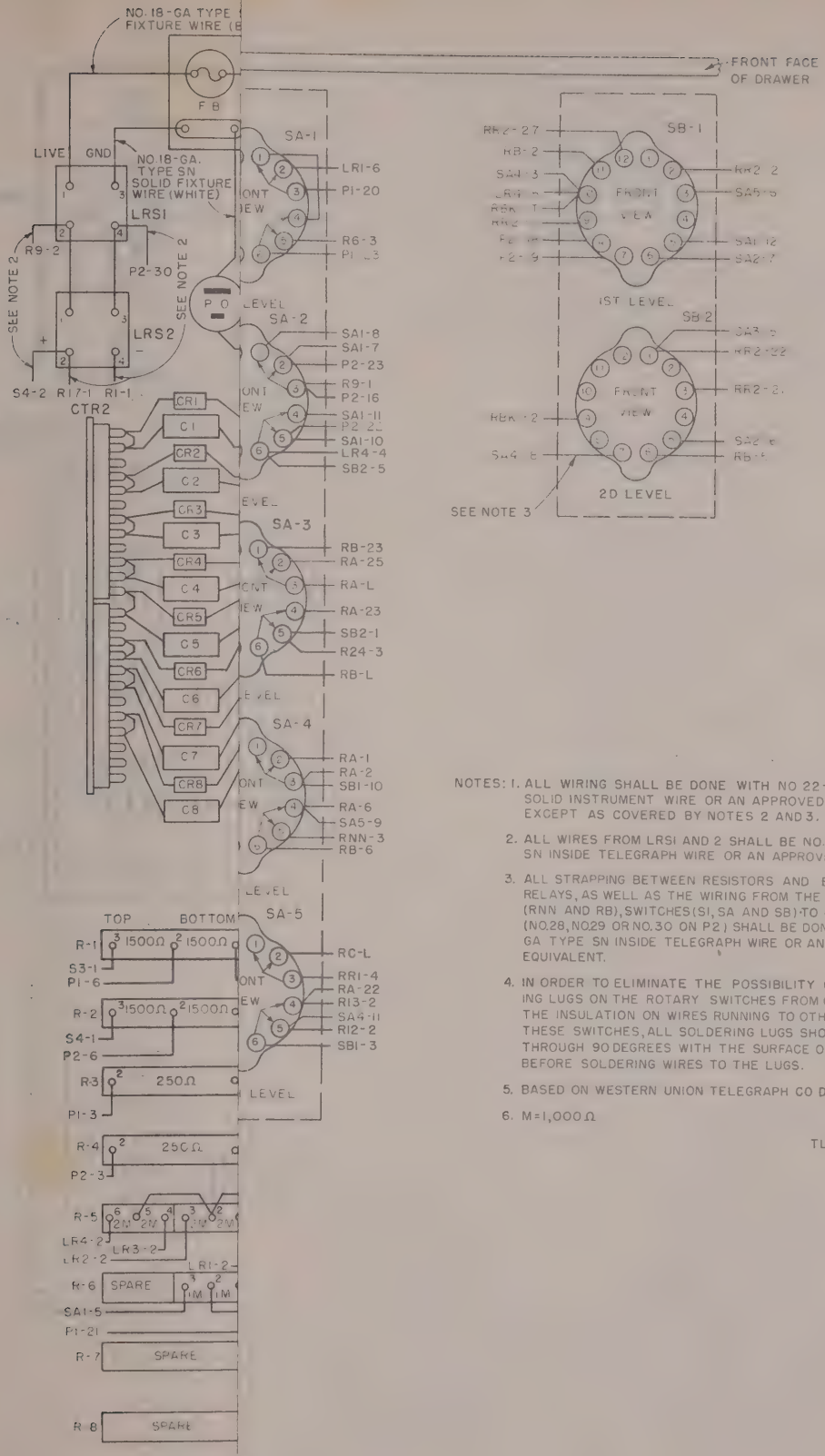

NOTES:
1. ALL WIRING SHALL BE DONE WITH NO 22-GA TYPE SN SOLID INSTRUMENT WIRE OR AN APPROVED EQUIVALENT EXCEPT AS COVERED BY NOTES 2 AND 3.
2. ALL WIRES FROM LRS1 AND 2 SHALL BE NO. 20-GA TYPE SN INSIDE TELEGRAPH WIRE OR AN APPROVED EQUIVALENT.
3. ALL STRAPPING BETWEEN RESISTORS AND BETWEEN RELAYS, AS WELL AS THE WIRING FROM THE RELAYS (RNN AND RB), SWITCHES (SI, SA AND SB) TO GROUNDED LUGS (NO.28, NO.29 OR NO.30 ON P2) SHALL BE DONE WITH NO.20-GA TYPE SN INSIDE TELEGRAPH WIRE OR AN APPROVED EQUIVALENT.
4. IN ORDER TO ELIMINATE THE POSSIBILITY OF THE SOLDERING LUGS ON THE ROTARY SWITCHES FROM CUTTING INTO THE INSULATION ON WIRES RUNNING TO OTHER LUGS ON THESE SWITCHES, ALL SOLDERING LUGS SHOULD BE BENT UP THROUGH 90 DEGREES WITH THE SURFACE OF THE WAFER BEFORE SOLDERING WIRES TO THE LUGS.
5. BASED ON WESTERN UNION TELEGRAPH CO DRAWING 108-230-10
6. M=1,000 Ω

TL 57263S

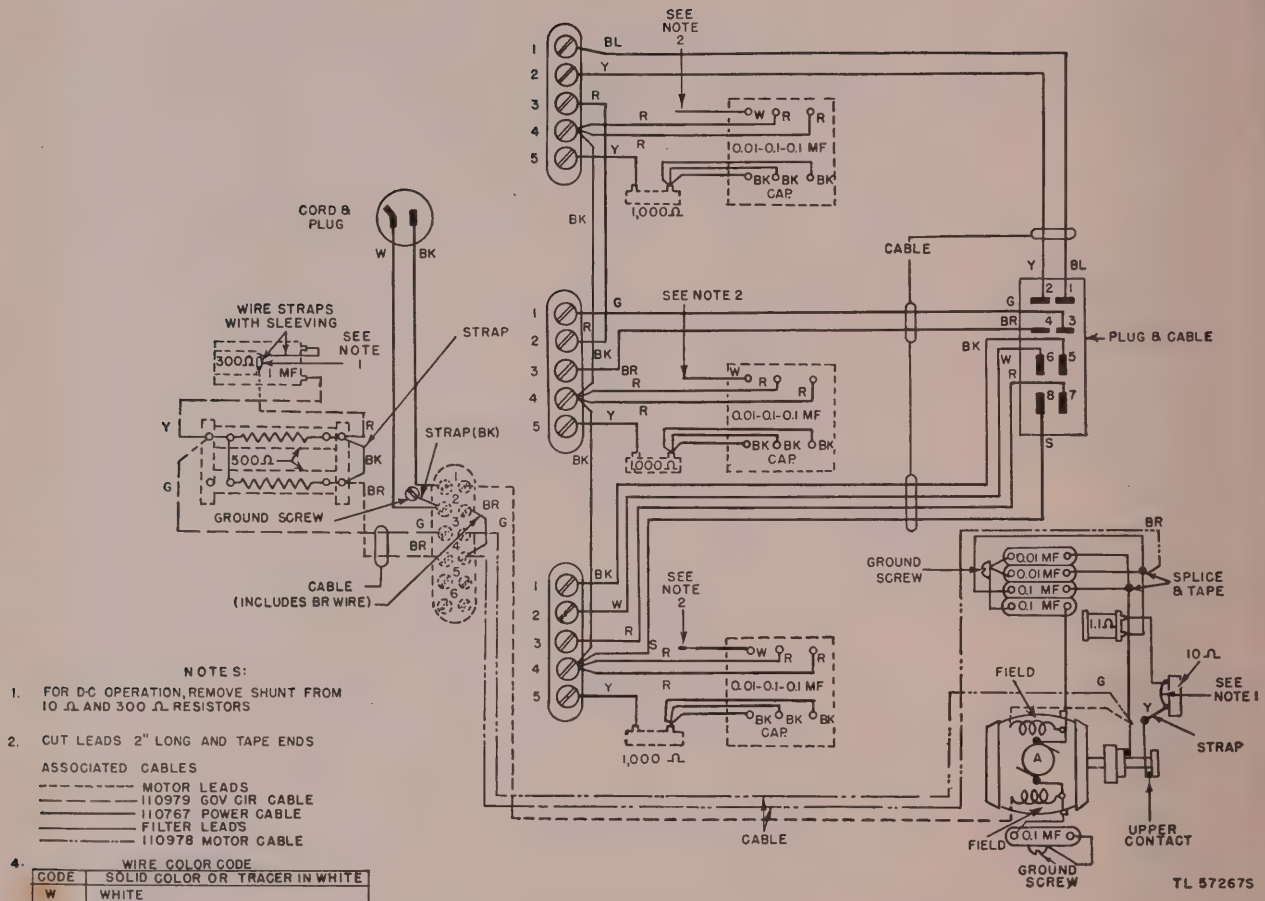

NOTES:

1. FOR D-C OPERATION, REMOVE SHUNT FROM 10 Ω AND 300 Ω RESISTORS
2. CUT LEADS 2" LONG AND TAPE ENDS
3. ASSOCIATED CABLES
   - MOTOR LEADS
   - 110979 GOV CIR CABLE
   - 110767 POWER CABLE
   - FILTER LEADS
   - 110978 MOTOR CABLE
4. WIRE COLOR CODE

CODE	SOLID COLOR OR TRACER IN WHITE
W	WHITE
G	GREEN
Y	YELLOW
R	RED
BK	BLACK
BR	BROWN
BL	BLUE
S	SLATE

5. BASED ON TELETYPE CORP DRAWING WD-2301-D

Figure 123. Multiple transmitter distributor base MXB8, wiring diagram.

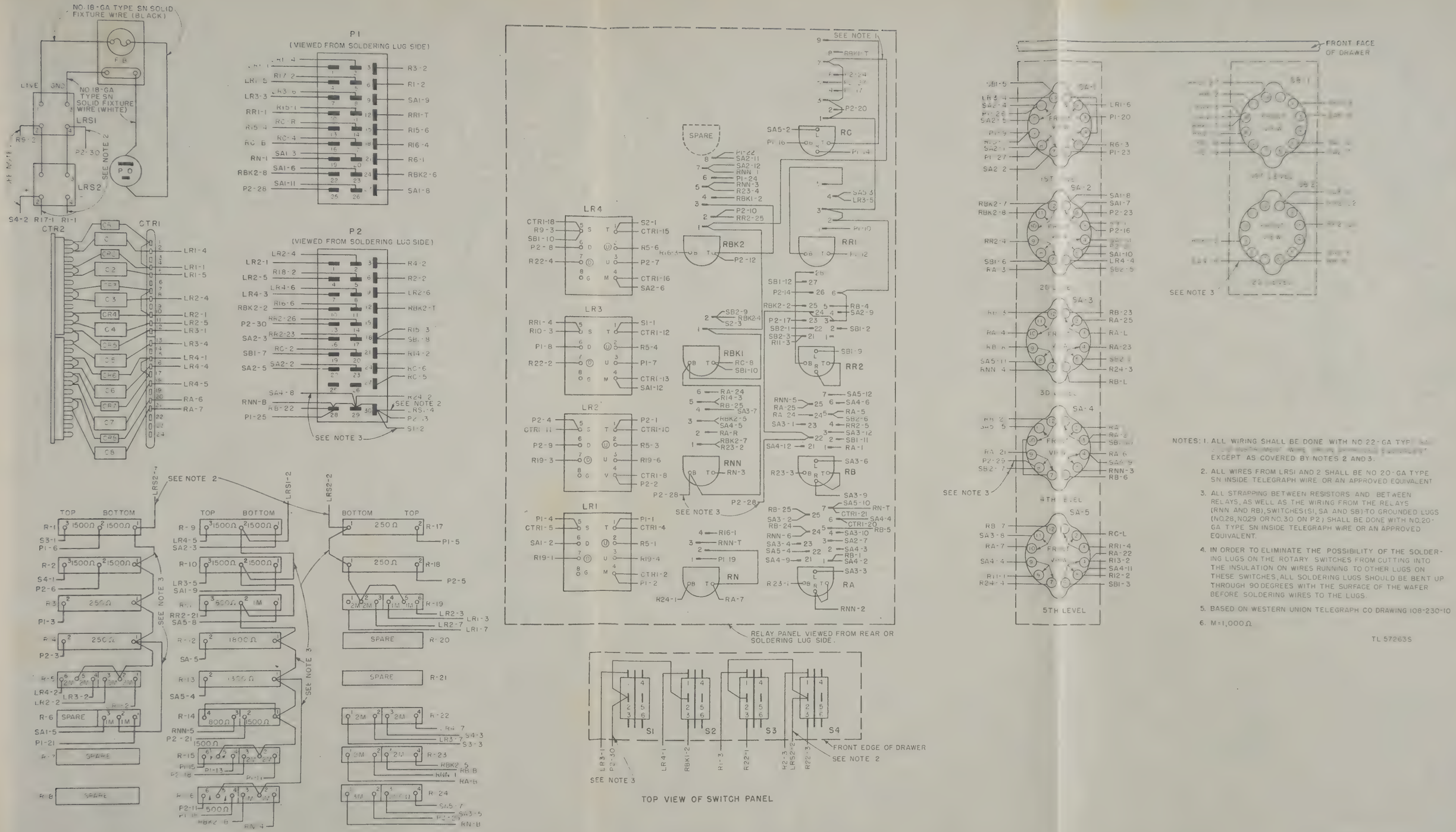

Figure 124. Equipment drawer, wiring diagram.

NOTES: 1. ALL WIRING SHALL BE DONE WITH NO 22-GA TYP[illegible] EXCEPT AS COVERED BY NOTES 2 AND 3.

2. ALL WIRES FROM LRSI AND 2 SHALL BE NO 20-GA TYPE SN INSIDE TELEGRAPH WIRE OR AN APPROVED EQUIVALENT

3. ALL STRAPPING BETWEEN RESISTORS AND BETWEEN RELAYS, AS WELL AS THE WIRING FROM THE RELAYS (RNN AND RB), SWITCHES (SI, SA AND SB) TO GROUNDED LUGS (NO.28, NO29 OR NO.30 ON P2) SHALL BE DONE WITH NO.20-GA TYPE SN INSIDE TELEGRAPH WIRE OR AN APPROVED EQUIVALENT.

4. IN ORDER TO ELIMINATE THE POSSIBILITY OF THE SOLDERING LUGS ON THE ROTARY SWITCHES FROM CUTTING INTO THE INSULATION ON WIRES RUNNING TO OTHER LUGS ON THESE SWITCHES, ALL SOLDERING LUGS SHOULD BE BENT UP THROUGH 90 DEGREES WITH THE SURFACE OF THE WAFER BEFORE SOLDERING WIRES TO THE LUGS.

5. BASED ON WESTERN UNION TELEGRAPH CO DRAWING 108-230-10

6. M=1,000Ω

TL 57263S

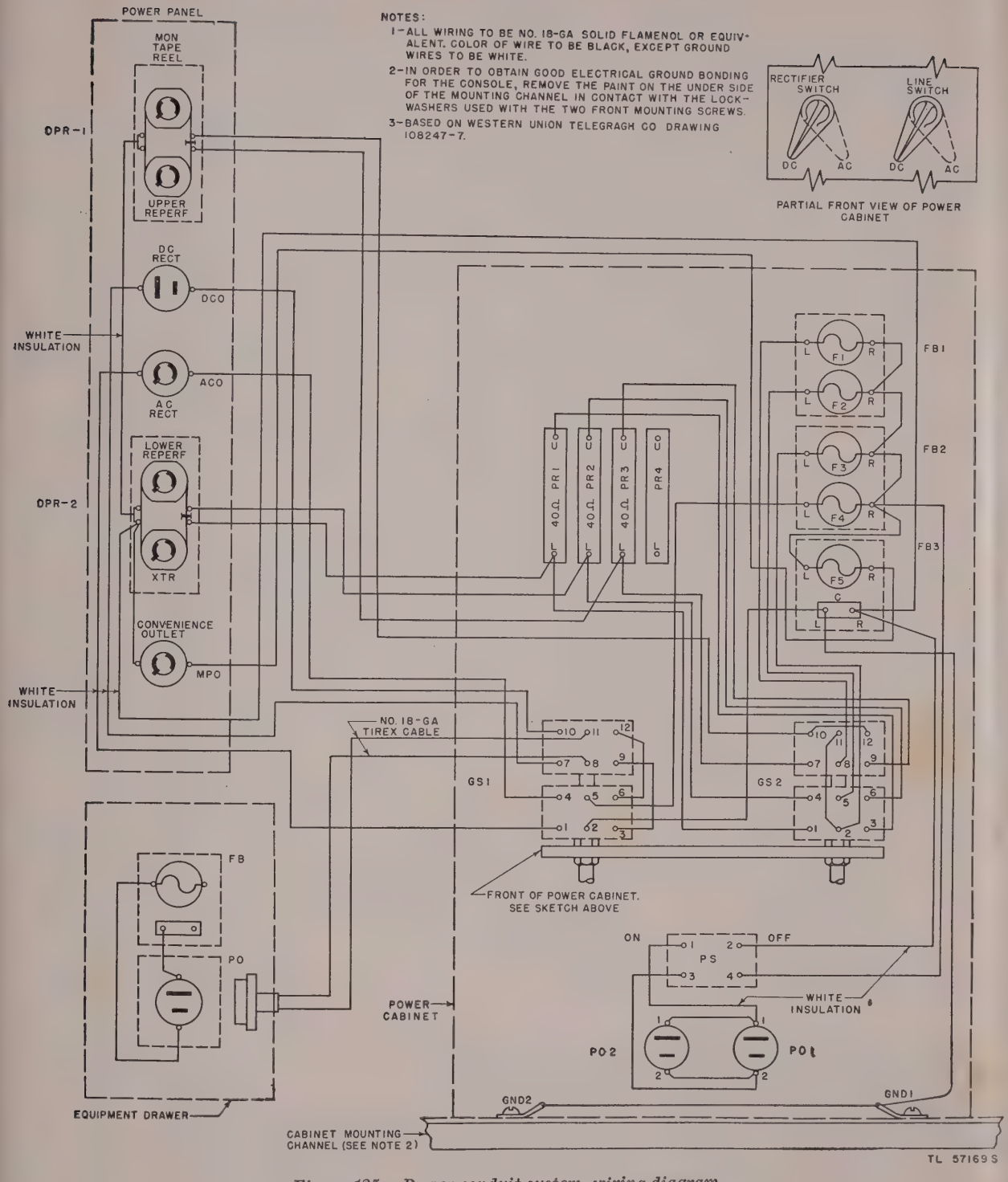

Figure 125. Power conduit system, wiring diagram.

LEGEND:

- ● TER
- ○ TER
- ◉ TER
- ◎ TER
- D TER
- ▲ TER
- △ TER
- ■ TER
- □ TER
- ⊗ TER

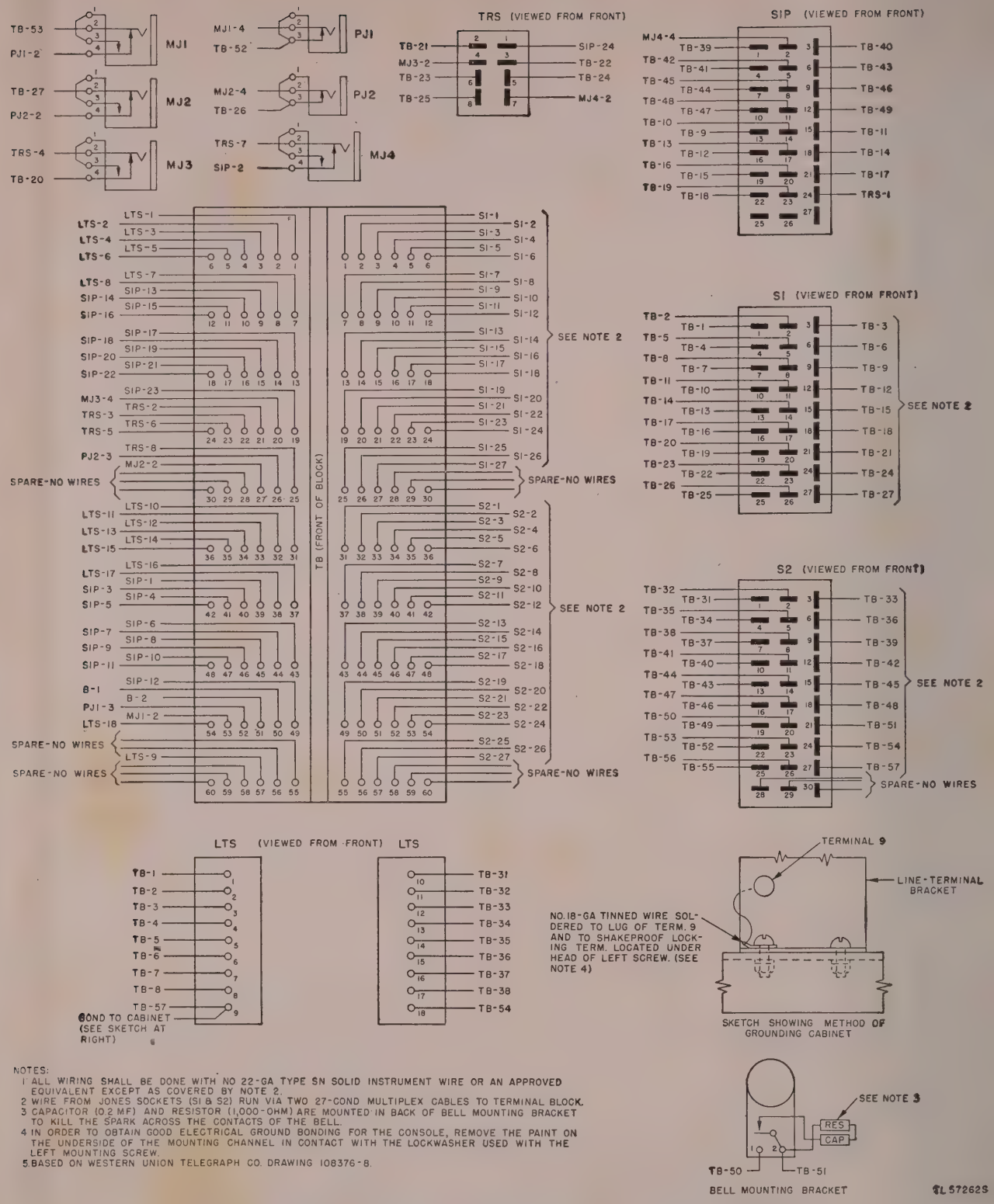

NOTES:
1. ALL WIRING SHALL BE DONE WITH NO 22-GA TYPE SN SOLID INSTRUMENT WIRE OR AN APPROVED EQUIVALENT EXCEPT AS COVERED BY NOTE 2.
2. WIRE FROM JONES SOCKETS (S1 & S2) RUN VIA TWO 27-COND MULTIPLEX CABLES TO TERMINAL BLOCK.
3. CAPACITOR (0.2 MF) AND RESISTOR (1,000-OHM) ARE MOUNTED IN BACK OF BELL MOUNTING BRACKET TO KILL THE SPARK ACROSS THE CONTACTS OF THE BELL.
4. IN ORDER TO OBTAIN GOOD ELECTRICAL GROUND BONDING FOR THE CONSOLE, REMOVE THE PAINT ON THE UNDERSIDE OF THE MOUNTING CHANNEL IN CONTACT WITH THE LOCKWASHER USED WITH THE LEFT MOUNTING SCREW.
5. BASED ON WESTERN UNION TELEGRAPH CO. DRAWING 108376-8.

Figure 126. Teletypewriter Set AN/TGC–1 (or AN/TGC–1A), signal wiring.

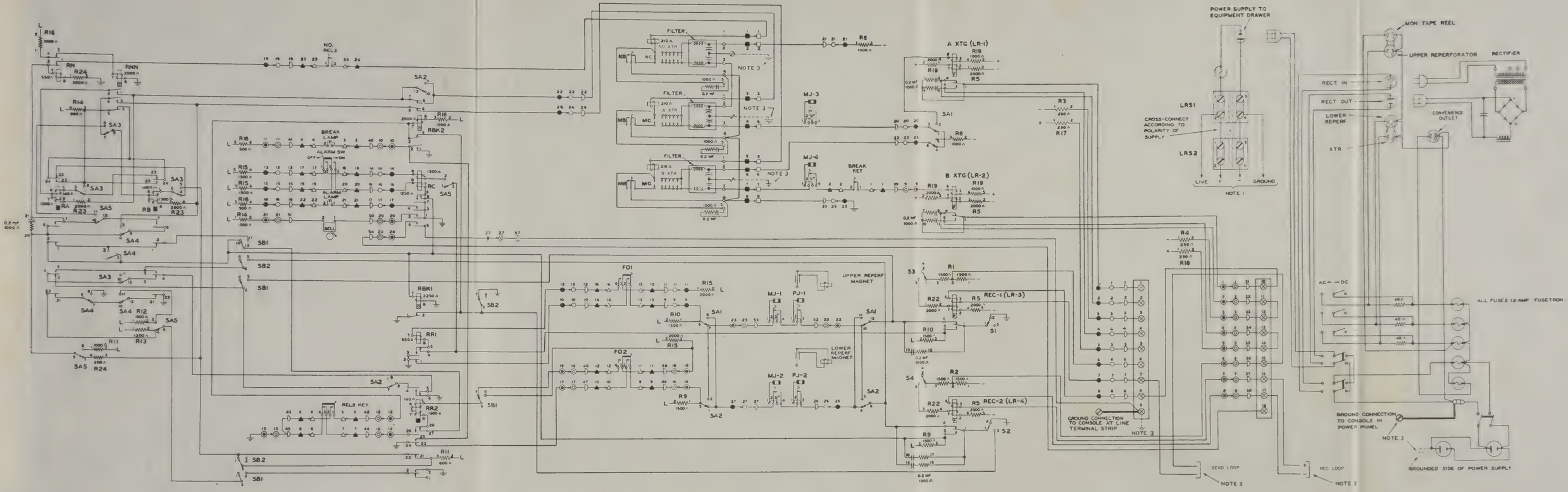

LEGEND:

- ● TERMINALS OF 27-PIN PLUG P-1
- ○ TERMINALS OF 27-PIN SOCKET S-1
- ◉ TERMINALS OF 30-PIN PLUG P-2
- ◎ TERMINALS OF 30-PIN SOCKET S-2
- ▷ TERMINALS OF NO 140-D TERMINAL BLOCK TB
- ▲ TERMINALS OF 27-PIN SIGNAL INDICATOR PLUG SIP
- △ TERMINALS OF 27-PIN SIGNAL INDICATOR SOCKET SIS
- ■ TERMINALS OF 8-PIN TRANSMITTER PLUG TRP
- □ TERMINALS OF 8-PIN TRANSMITTER SOCKET TRS
- ⊗ TERMINALS OF LINE TERMINAL STRIP LTS

POLAR RELAY

SLOW OPERATE RELAY (ARM SLUG)

SLOW RELEASE RELAY (HEEL SLUG)

NOTES:

1. LINE CONNECTS TO ALL POINTS MARKED L ON DIAGRAM
   + CONNECTS TO ALL POINTS MARKED + ON DIAGRAM
   − CONNECTS TO ALL POINTS MARKED − ON DIAGRAM
   GROUND CONNECTS TO ALL POINTS MARKED ⏚ ON DIAGRAM

2. THE + AND − SIGNS ON THE EXTERNAL LINE LEADS MERELY INDICATE CORRECT POLARITY FOR SIGNALING BATTERY. THESE POINTS ARE NOT CONNECTED TO BLOCK LRS2.

3. THESE POINTS ARE PHYSICALLY GROUNDED. WHEN POWER IS SUPPLIED TO EQUIPMENT DRAWER FROM THE RECTIFIER THERE WILL BE NO PHYSICAL GROUND IN THE EQUIPMENT DRAWER AND THEREFORE NO CONNECTION BETWEEN LRS1-4 AND THE POINTS MARKED "NOTE 3."

4. SA1, SA2, SA3, SA4, AND SA5 = FIVE-SECTION ROTARY SWITCH "SPLIT-NORMAL"
   SB1 AND SB2 = TWO-SECTION ROTARY SWITCH "DUPLEX-SINGLE"
   S1 AND S2 = TOGGLE SWITCHES "OPR-NON-OPR"
   S3 AND S4 = TOGGLE SWITCHES "POLAR - MAKE AND BREAK"

5. BASED ON WESTERN UNION TELEGRAPH CO DRAWING P-10222

TI. 57275S

Normal duplex polar operation, schematic diagram, of AN/TGC - 1

823667 O - 49 (Face p. 172) No. 1

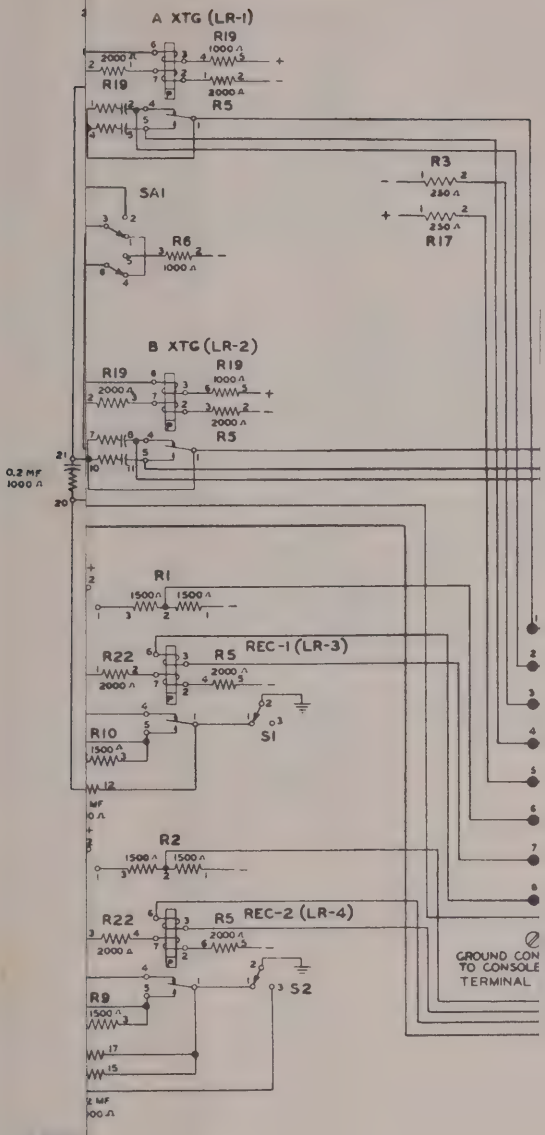

LEGEND:

- ● TE
- ○ TE
- ◉ TE
- ◎ TE
- D TE
- ▲ TE
- △ TE
- ■ TE
- □ TE
- ⊗ TE

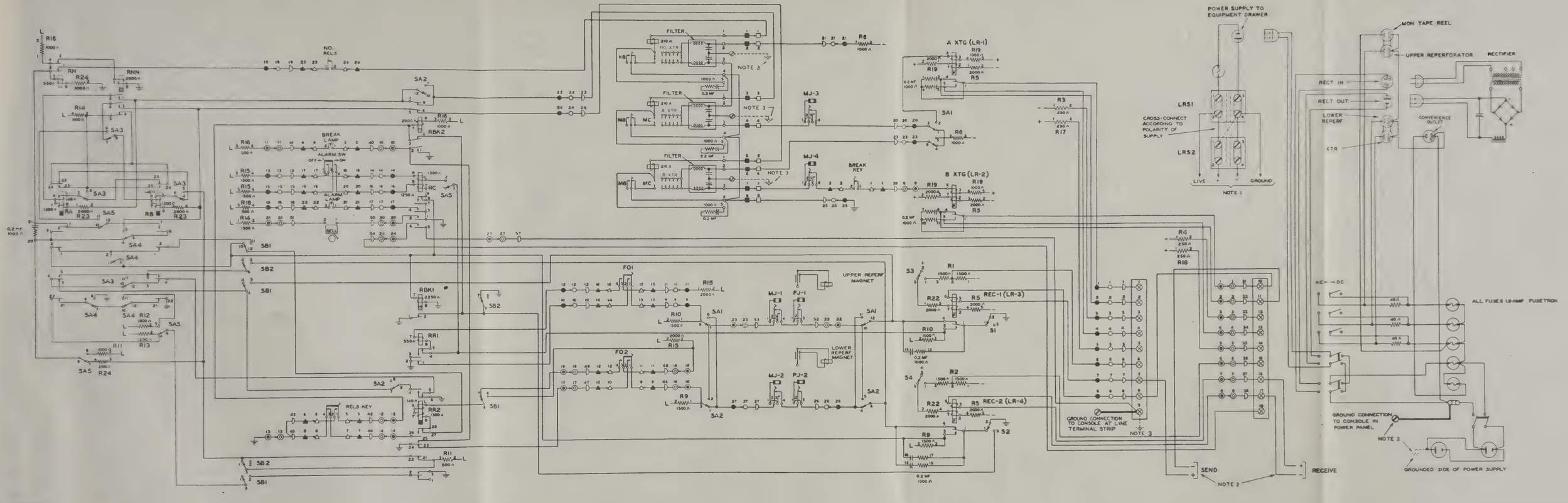

LEGEND:

- ● TERMINALS OF 27-PIN PLUG P-1
- ○ TERMINALS OF 27-PIN SOCKET S-1
- ◉ TERMINALS OF 30-PIN PLUG P-2
- ◎ TERMINALS OF 30-PIN SOCKET S-2
- ▷ TERMINALS OF NO 140-D TERMINAL BLOCK TB
- ▲ TERMINALS OF 27-PIN SIGNAL INDICATOR PLUG SIP
- △ TERMINALS OF 27-PIN SIGNAL INDICATOR SOCKET SIS
- ■ TERMINALS OF 8-PIN TRANSMITTER PLUG TRP
- □ TERMINALS OF 8-PIN TRANSMITTER SOCKET TRS
- ⊗ TERMINALS OF LINE TERMINAL STRIP LTS

POLAR RELAY

SLOW OPERATE RELAY (ARM SLUG)

SLOW RELEASE RELAY (HEEL SLUG)

NOTES:

1. LINE CONNECTS TO ALL POINTS MARKED L ON DIAGRAM
   + CONNECTS TO ALL POINTS MARKED + ON DIAGRAM
   − CONNECTS TO ALL POINTS MARKED − ON DIAGRAM
   GROUND CONNECTS TO ALL POINTS MARKED ⏚ ON DIAGRAM

2. THE + AND − SIGNS ON THE EXTERNAL LINE LEADS MERELY INDICATE CORRECT POLARITY FOR SIGNALING BATTERY. THESE POINTS ARE NOT CONNECTED TO BLOCK LRS2.

3. THESE POINTS ARE PHYSICALLY GROUNDED. WHEN POWER IS SUPPLIED TO EQUIPMENT DRAWER FROM THE RECTIFIER THERE WILL BE NO PHYSICAL GROUND IN THE EQUIPMENT DRAWER AND THEREFORE NO CONNECTION BETWEEN LRS1-4 AND THE POINTS MARKED "NOTE 3"

4. SA1, SA2, SA3, SA4, AND SA5 = FIVE-SECTION ROTARY SWITCH "SPLIT-NORMAL"
   SB1 AND SB2 = TWO-SECTION ROTARY SWITCH "DUPLEX-SINGLE"
   S1 AND S2 = TOGGLE SWITCHES "OPR-NON-OPR"
   S3 AND S4 = TOGGLE SWITCHES "POLAR-MAKE AND BREAK"

5. BASED ON WESTERN UNION TELEGRAPH CO DRAWING P-10223

TL57215

823667 O - 49 (Face p. 172) No. 2

Figure 128. Normal duplex make-and-break operation, schematic diagram.

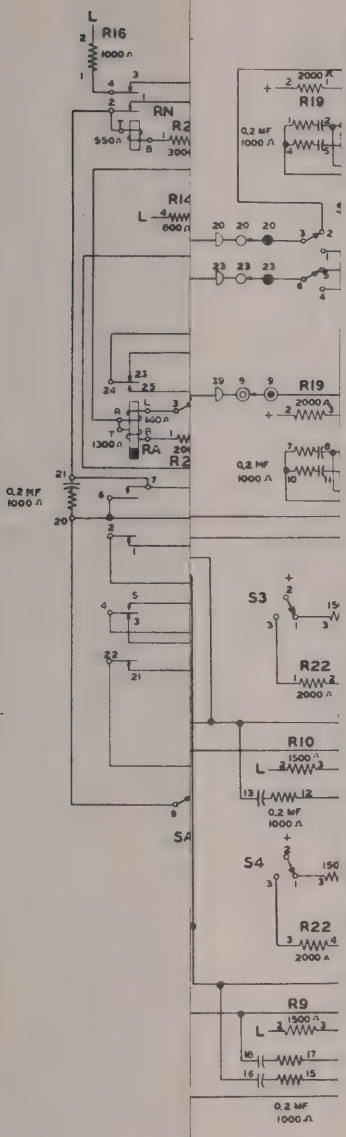

LEGEND:

- ● TERMINALS OF 27
- ○ TERMINALS OF 27
- ◉ TERMINALS OF 30
- ◎ TERMINALS OF 30
- D TERMINALS OF NI
- ▲ TERMINALS OF 27
- △ TERMINALS OF 27
- ■ TERMINALS OF 8-
- □ TERMINALS OF 8-
- ⊗ TERMINALS OF L

matic

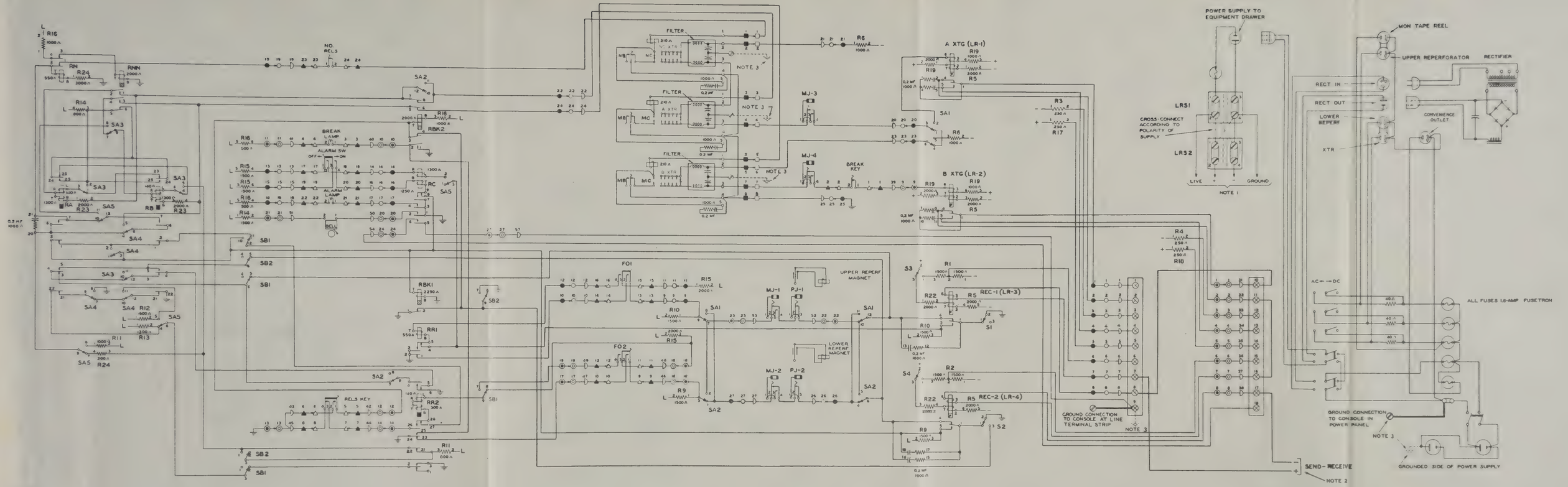

LEGEND.

- ● TERMINALS OF 27-PIN PLUG P-1
- ○ TERMINALS OF 27-PIN SOCKET S-1
- ◉ TERMINALS OF 30-PIN PLUG P-2
- ◎ TERMINALS OF 30-PIN SOCKET S-2
- ▷ TERMINALS OF NO 140-D TERMINAL BLOCK TB
- ▲ TERMINALS OF 27-PIN SIGNAL INDICATOR PLUG SIP
- △ TERMINALS OF 27-PIN SIGNAL INDICATOR SOCKET SIS
- ■ TERMINALS OF 8-PIN TRANSMITTER PLUG TRP
- □ TERMINALS OF 8-PIN TRANSMITTER SOCKET TRS
- ⊗ TERMINALS OF LINE TERMINAL STRIP LTS

POLAR RELAY

SLOW OPERATE RELAY (ARM SLUG)

SLOW RELEASE RELAY (HEEL SLUG)

NOTES

1. LIVE CONNECTS TO ALL POINTS MARKED L ON DIAGRAM
   + CONNECTS TO ALL POINTS MARKED + ON DIAGRAM
   − CONNECTS TO ALL POINTS MARKED − ON DIAGRAM
   GROUND CONNECTS TO ALL POINTS MARKED ⏚ ON DIAGRAM

2. THE + AND − SIGNS ON THE EXTERNAL LINE LEADS MERELY INDICATE CORRECT POLARITY FOR SIGNALING BATTERY. THESE POINTS ARE NOT CONNECTED TO BLOCK LRS2.

3. THESE POINTS ARE PHYSICALLY GROUNDED. WHEN POWER IS SUPPLIED TO EQUIPMENT DRAWER FROM THE RECTIFIER THERE WILL BE NO PHYSICAL GROUND IN THE EQUIPMENT DRAWER AND THEREFORE NO CONNECTION BETWEEN LRS1-4 AND THE POINTS MARKED "NOTE 3".

4. SA1, SA2, SA3, SA4, AND SA5 = FIVE-SECTION ROTARY SWITCH "SPLIT-NORMAL"
   SB1 AND SB2 = TWO-SECTION ROTARY SWITCH "DUPLEX-SINGLE"
   S1 AND S2 = "TOGGLE SWITCHES "OPR-NON-OPR."
   S3 AND S4 = "TOGGLE SWITCHES "POLAR-MAKE AND BREAK"

5. BASED ON WESTERN UNION TELEGRAPH CO DRAWING P-10224

TI-57745

Figure 129. Normal single operation, schematic diagram.

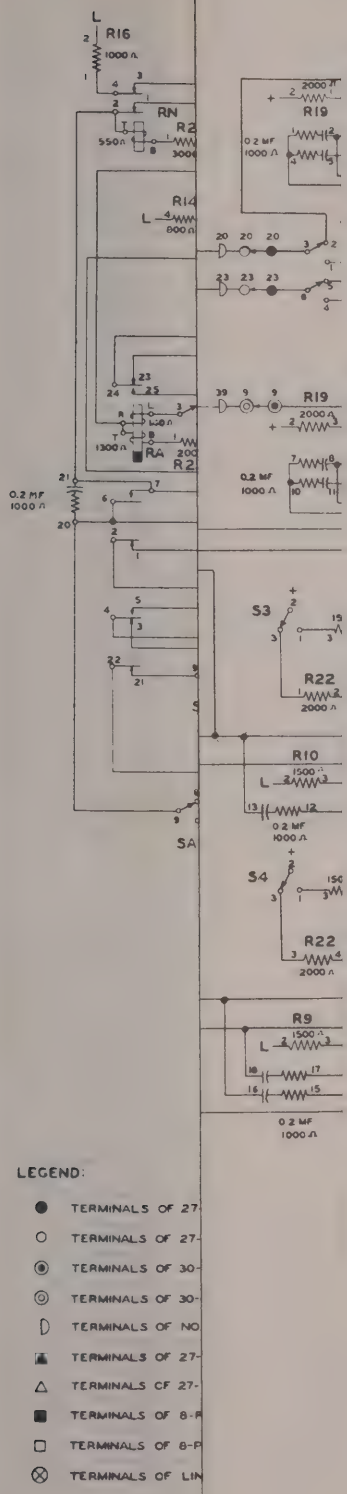
R16
1000 Ω
RN
R2
550 Ω
R14
800 Ω
R19
2000 Ω
0.2 MF
1000 Ω
RA
1300 Ω
S3
R22
2000 Ω
R10
1500 Ω
S4
R9
SA
LEGEND:
TERMINALS OF 27-
TERMINALS OF 27-
TERMINALS OF 30-
TERMINALS OF 30-
TERMINALS OF NO
TERMINALS OF 27-
TERMINALS OF 27-
TERMINALS OF 8-P
TERMINALS OF 8-P
TERMINALS OF LIN

ation,

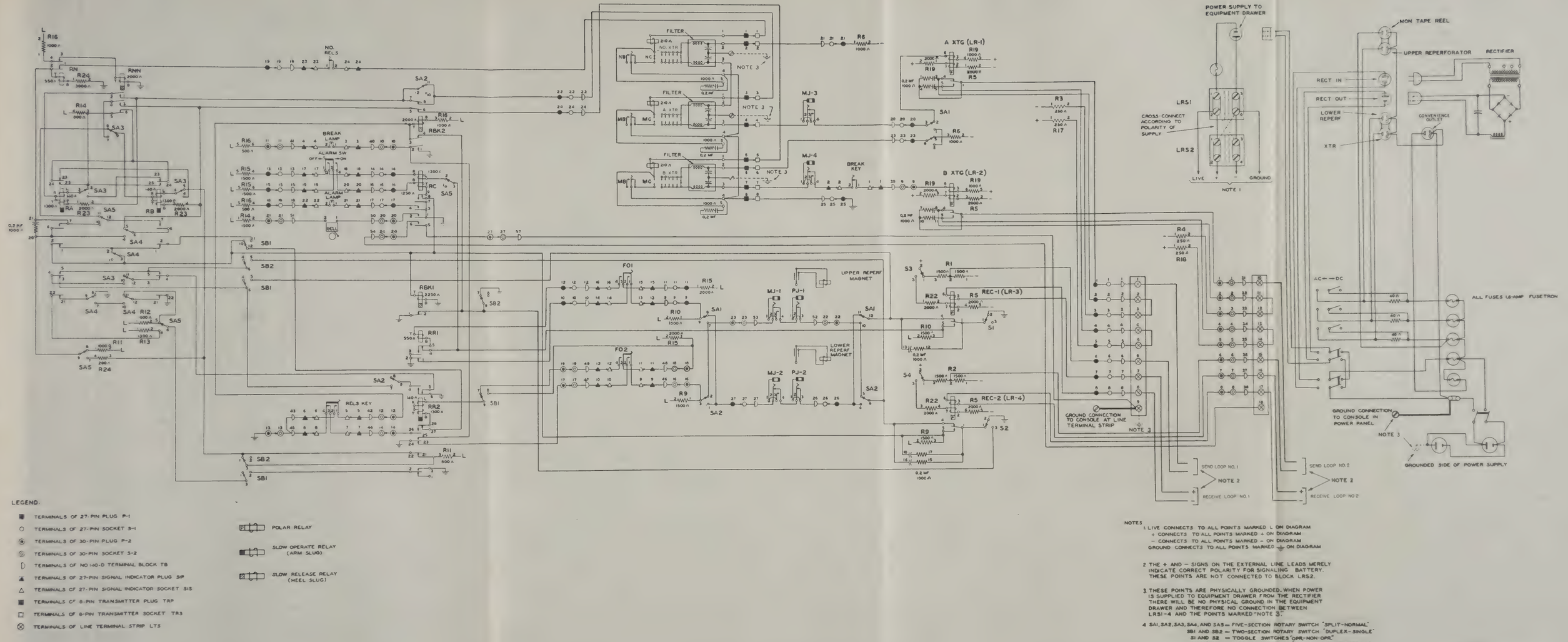
POWER SUPPLY TO EQUIPMENT DRAWER
MON TAPE REEL
UPPER REPERFORATOR
RECTIFIER
RECT IN
RECT OUT
LOWER REPERF
XTR
CONVENIENCE OUTLET
LRS1
LRS2
CROSS-CONNECT ACCORDING TO POLARITY OF SUPPLY
LIVE
GROUND
NOTE 1
A XTG (LR-1)
B XTG (LR-2)
FILTER
NO. XTR
A XTR
B XTR
NOTE 3
MJ-1
MJ-2
MJ-3
MJ-4
PJ-1
PJ-2
BREAK KEY
ALARM SW
ALARM LAMP
BELL
BREAK LAMP
REL3 KEY
UPPER REPERF MAGNET
LOWER REPERF MAGNET
REC-1 (LR-3)
REC-2 (LR-4)
GROUND CONNECTION TO CONSOLE AT LINE TERMINAL STRIP
NOTE 3
SEND LOOP NO.1
RECEIVE LOOP NO.1
SEND LOOP NO.2
RECEIVE LOOP NO.2
NOTE 2
AC — DC
ALL FUSES 1.6-AMP FUSETRON
GROUND CONNECTION TO CONSOLE IN POWER PANEL
GROUNDED SIDE OF POWER SUPPLY
LEGEND:
TERMINALS OF 27-PIN PLUG P-1
TERMINALS OF 27-PIN SOCKET S-1
TERMINALS OF 30-PIN PLUG P-2
TERMINALS OF 30-PIN SOCKET S-2
TERMINALS OF NO 140-D TERMINAL BLOCK TB
TERMINALS OF 27-PIN SIGNAL INDICATOR PLUG SIP
TERMINALS OF 27-PIN SIGNAL INDICATOR SOCKET SIS
TERMINALS OF 8-PIN TRANSMITTER PLUG TRP
TERMINALS OF 8-PIN TRANSMITTER SOCKET TRS
TERMINALS OF LINE TERMINAL STRIP LTS
POLAR RELAY
SLOW OPERATE RELAY (ARM SLUG)
SLOW RELEASE RELAY (HEEL SLUG)
NOTES
1. LIVE CONNECTS TO ALL POINTS MARKED L ON DIAGRAM
+ CONNECTS TO ALL POINTS MARKED + ON DIAGRAM
— CONNECTS TO ALL POINTS MARKED — ON DIAGRAM
GROUND CONNECTS TO ALL POINTS MARKED ⏚ ON DIAGRAM
2 THE + AND — SIGNS ON THE EXTERNAL LINE LEADS MERELY INDICATE CORRECT POLARITY FOR SIGNALING BATTERY. THESE POINTS ARE NOT CONNECTED TO BLOCK LRS2.
3 THESE POINTS ARE PHYSICALLY GROUNDED. WHEN POWER IS SUPPLIED TO EQUIPMENT DRAWER FROM THE RECTIFIER THERE WILL BE NO PHYSICAL GROUND IN THE EQUIPMENT DRAWER AND THEREFORE NO CONNECTION BETWEEN LRS1-4 AND THE POINTS MARKED "NOTE 3."
4 SA1, SA2, SA3, SA4, AND SA5 — FIVE-SECTION ROTARY SWITCH "SPLIT-NORMAL"
SB1 AND SB2 — TWO-SECTION ROTARY SWITCH "DUPLEX-SINGLE"
S1 AND S2 — TOGGLE SWITCHES "OPR-NON-OPR"
S3 AND S4 — TOGGLE SWITCHES "POLAR - MAKE AND BREAK"
5 BASED ON WESTERN UNION TELEGRAPH CO DRAWING P-10225
TI 572705
823667 O - 49 (Face p. 172) No. 4

Figure 130. Split duplex polar operation, schematic diagram.

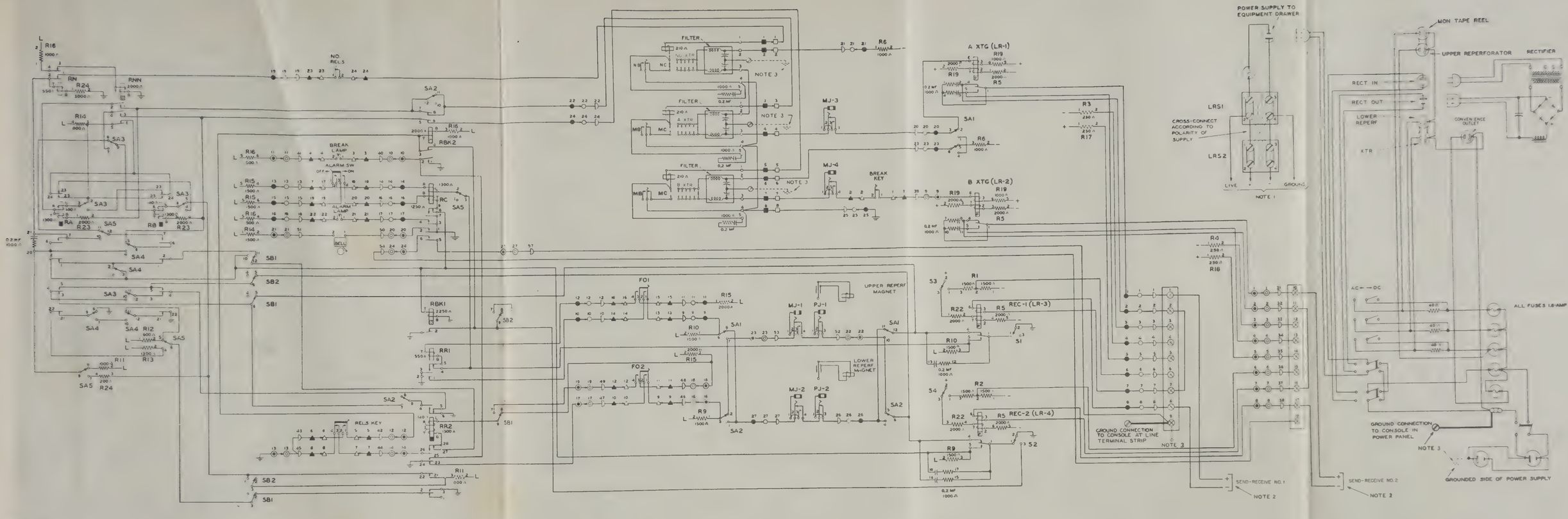

LEGEND

- ● TERMINALS OF 27-PIN PLUG P-1
- ○ TERMINALS OF 27-PIN SOCKET S-1
- ◉ TERMINALS OF 30-PIN PLUG P-2
- ◎ TERMINALS OF 30-PIN SOCKET S-2
- ▯ TERMINALS OF NO 140-D TERMINAL BLOCK TB
- ▲ TERMINALS OF 27-PIN SIGNAL INDICATOR PLUG SIP
- △ TERMINALS OF 27-PIN SIGNAL INDICATOR SOCKET SIS
- ■ TERMINALS OF 8-PIN TRANSMITTER PLUG TRP
- □ TERMINALS OF 8-PIN TRANSMITTER SOCKET TRS
- ⊗ TERMINALS OF LINE TERMINAL STRIP LTS

POLAR RELAY

SLOW OPERATE RELAY (ARM SLUG)

SLOW RELEASE RELAY (HEEL SLUG)

NOTES

1. LIVE CONNECTS TO ALL POINTS MARKED L ON DIAGRAM
   + CONNECTS TO ALL POINTS MARKED + ON DIAGRAM
   − CONNECTS TO ALL POINTS MARKED − ON DIAGRAM
   GROUND CONNECTS TO ALL POINTS MARKED ⏚ ON DIAGRAM
2. THE + AND − SIGNS ON THE EXTERNAL LINE LEADS MERELY INDICATE CORRECT POLARITY FOR SIGNALING BATTERY. THESE POINTS ARE NOT CONNECTED TO BLOCK LRS2.
3. THESE POINTS ARE PHYSICALLY GROUNDED. WHEN POWER IS SUPPLIED TO EQUIPMENT DRAWER FROM THE RECTIFIER THERE WILL BE NO PHYSICAL GROUND IN THE EQUIPMENT DRAWER AND THEREFORE NO CONNECTION BETWEEN LRS1-4 AND THE POINTS MARKED "NOTE 3".
4. SA1, SA2, SA3, SA4, AND SA5 = FIVE-SECTION ROTARY SWITCH "SPLIT-NORMAL"
   SB1 AND SB2 = TWO-SECTION ROTARY SWITCH "DUPLEX-SINGLE"
   S1 AND S2 = TOGGLE SWITCHES "OPR-NON-OPR"
   S3 AND S4 = TOGGLE SWITCHES "POLAR-MAKE AND BREAK"
5. BASED ON WESTERN UNION TELEGRAPH CO. DRAWING P-10227

TL 572695

Figure 132. Split single operation, schematic diagram.

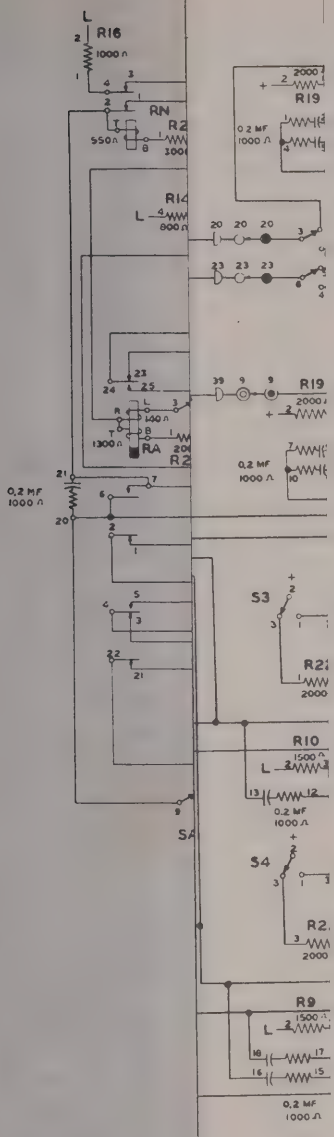

LEGEND:

- ● TERMINALS OF 27
- ○ TERMINALS OF 27
- ◉ TERMINALS OF 30
- ◎ TERMINALS OF 30
- ▷ TERMINALS OF NC
- ▲ TERMINALS OF 27
- △ TERMINALS OF 27
- ■ TERMINALS OF 8-
- □ TERMINALS OF 8-
- ⊗ TERMINALS OF LI

gram.

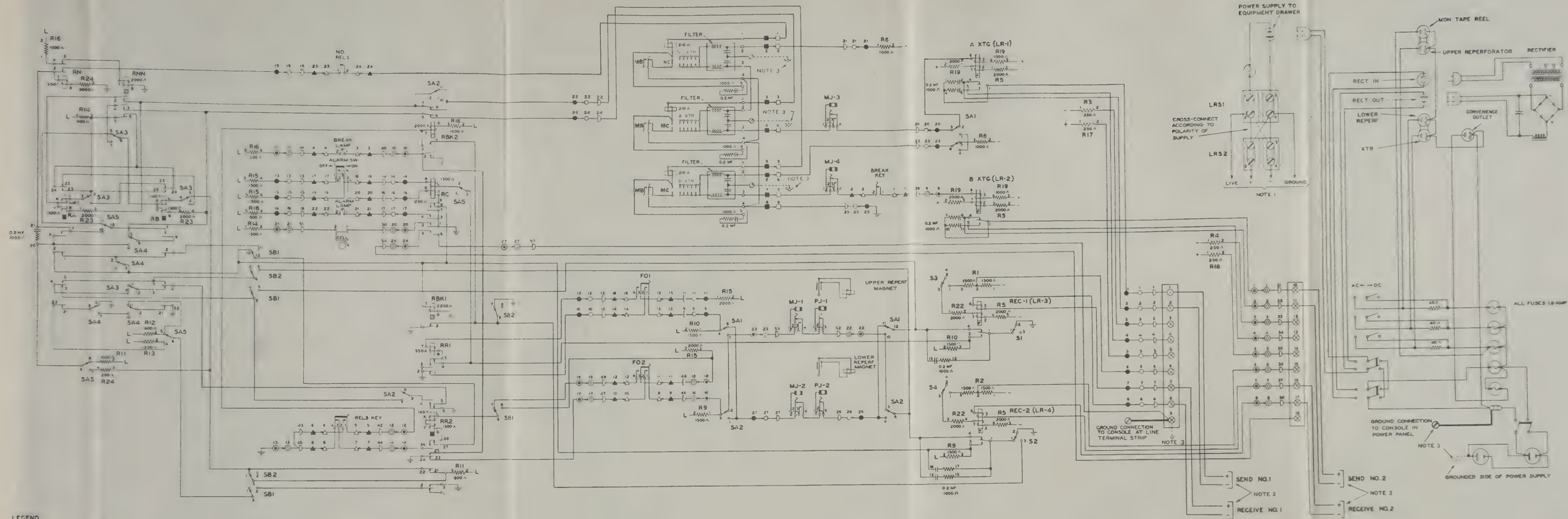

LEGEND

- TERMINALS OF 27-PIN PLUG P-1
- TERMINALS OF 27-PIN SOCKET S-1
- TERMINALS OF 30-PIN PLUG P-2
- TERMINALS OF 30-PIN SOCKET S-2
- TERMINALS OF NO. 140-D TERMINAL BLOCK TB
- TERMINALS OF 27-PIN SIGNAL INDICATOR PLUG SIP
- TERMINALS OF 27-PIN SIGNAL INDICATOR SOCKET SIS
- TERMINALS OF 8-PIN TRANSMITTER PLUG TRP
- TERMINALS OF 8-PIN TRANSMITTER SOCKET TRS
- TERMINALS OF LINE TERMINAL STRIP LTS

POLAR RELAY

SLOW OPERATE RELAY (ARM SLUG)

SLOW RELEASE RELAY (HEEL SLUG)

NOTES

1. LIVE CONNECTS TO ALL POINTS MARKED L ON DIAGRAM
   \+ CONNECTS TO ALL POINTS MARKED + ON DIAGRAM
   − CONNECTS TO ALL POINTS MARKED − ON DIAGRAM
   GROUND CONNECTS TO ALL POINTS MARKED ⏚ ON DIAGRAM

2. THE + AND − SIGNS ON THE EXTERNAL LINE LEADS MERELY INDICATE CORRECT POLARITY FOR SIGNALING BATTERY. THESE POINTS ARE NOT CONNECTED TO BLOCK LRS2.

3. THESE POINTS ARE PHYSICALLY GROUNDED. WHEN POWER IS SUPPLIED TO EQUIPMENT DRAWER FROM THE RECTIFIER THERE WILL BE NO PHYSICAL GROUND IN THE EQUIPMENT DRAWER AND THEREFORE NO CONNECTION BETWEEN LRS1-4 AND THE POINTS MARKED "NOTE 3".

4. SA1, SA2, SA3, SA4, AND SA5 = FIVE-SECTION ROTARY SWITCH "SPLIT-NORMAL"
   SB1 AND SB2 = TWO-SECTION ROTARY SWITCH "DUPLEX-SINGLE"
   S1 AND S2 = TOGGLE SWITCHES "OPR-NON-OPR"
   S3 AND S4 = TOGGLE SWITCHES "POLAR-MAKE AND BREAK"

5. BASED ON WESTERN UNION TELEGRAPH CO. DRAWING P-10226.

TL57279S

Figure 131. Split duplex make-and-break operation, schematic diagram.

7. Identification Table of Replaceable Parts for Teletypewriter Sets AN/TGC–1 and AN/TGC–1A

Ref. symbol	Name of part and description	Function of part	Signal Corps stock No.
	TELETYPEWRITER SET AN/TGC–1: fixed station; std com keyboard; English characters; 72 characters per line; sending and receiving; sprocket feed; 110 v to 120 v AC, 50/60 cyc series-governed motor; 5 unit code; 368 opm.	Complete teletypewriter set for use in com-centers and tape-relay stations. Sends, receives, and monitors teletype messages on perforated tape on which the message also is typed.	4T1000–1
	TELETYPEWRITER SET AN/TGC–1A: fixed station; std com keyboard; English characters; 72 characters per line; sending and receiving; sprocket feed; 110 v to 120 v AC, 50/60 cyc series-governed motor; 5 unit code, 368 or 600 opm.		4T1000–1A
	TECHNICAL MANUAL TM 11–2203	Describes Teletypewriter Sets AN/TGC–1 and AN/TGC–1A.	(Order through AGO channels).
	TECHNICAL MANUAL TM 11–2223	Describes typing and nontyping reperforators.	(Order through AGO channels).
	Note.—Teletype parts are listed in numerical sequence; all other parts in alphabetical order.		
	MISCELLANEOUS		
	BELL: vibrating; nonadjustable; one 3″ diam gong; 5½″ lg x 3½″ wd x 1½″ d over-all; oper v DC 24 to 60 v, oper v AC 60 cyc 35 to 60 v; 682 ohms; WECo #7FW.	Alarm bell	4Z1107FW
TB	BOARD, terminal: 60 tinned solder lug term, mtd 10 to a row; ¼″ spacing between lugs; wood base w/black phenolic spacers; 3¾″ lg x 3½″ wd x 2″ thk over-all; WECo #140D.	For line terminations	3Z770–60.1
	CABLE: 2 #14 AWG stranded cond, ea comprising 41 #30 AWG strands; rubber jacket; 600 v working; 0.410″ OD; Simplex Tirex type S.	Power cord to additional units	1B814.70
	CABLE: 2 #18 AWG stranded cond, ea comprising 41 #34 AWG strands; neoprene jacket; 300 v working; 0.390″ OD; Simplex Tirex type SJ.	Power cord to equipment drawer.	1B818.14
	CABLE: teletype multiplex cable; 27 #22 AWG cond, ea comprising 7 #34 AWG strands; rubber-insulated, no color code; 600 v working; rubber jacket; 0.500″ OD; Molded insul dwg #2565–20.	Special purpose cable	1B3022–27.1
	CONNECTOR, receptacle: female; 2 cont; straight; 1⅛″ lg x $1\frac{25}{64}$″ diam over-all; Hubbell #9213.	A-c outlet for rectifier	6Z7815
TRS	CONNECTOR, receptacle: female duplex outlet, ea 2 cont; straight; 2½″ lg x 1½″ wd x 1⅜″ d overall; Hubbell #9216.	For upper and lower reperforators, monitor tape reel, and distributor.	2Z3063–44
	CONNECTOR, receptacle: female; 8 cont; straight; 1¼″ lg x $1\frac{5}{16}$″ wd x ¾″ overall; 5 amp, 45 v; mtg flange w/two 0.152″ diam holes on 1″ mtg/c; Jones HB #S–308–AB.	Power and signal connector to transmitter.	2Z8639–15
S–1	CONNECTOR, plug: female; 27 flat cont blades; straight; $2\frac{15}{16}$″ lg x $1\frac{13}{16}$″ wd x 1⅛″ d overall; Jones HB #S–327–CCT.	Ties in line terminal harness to relay drawer and signal indicator.	2Z8697.1

Ref. symbol	Name of part and description	Function of part	Signal Corps stock No.
	MISCELLANEOUS—Continued		
S–2	CONNECTOR, plug; female; 30 cont; straight; 1 13/16″ lg x 3¼″ wd x 1⅜″ d overall; 5 amp, 45 v; includes cable clamp w/two #6–32 screws at top and 2 keepers mtd 1 ea side of body; Jones HB #S–330–CCT.	Ties line terminal harness into relay drawer.	2Z8699–2
	FORK, tuning: fixed frequency, 87.6 vibrations per sec; steel, cadmium pl; 11/16″ lg x 1⅛″ wd x 11/32″ thk overall.	For adjusting speed of governed motor.	4T103628
	HOLDER: mts on front, right side of cabinet; steel; 4½″ diam x 1″ wd overall; includes cover and bracket; Western Union #1006A.	Number tape holder	4T1000–4
	HOLDER: c/o coil spring and U-shape bracket; 3¼″ lg x 1⅛″ wd x 1½″ h overall; Western Union dwg #A–10210.	Tape holder	4T1000–2
	JACK JK–24: for 2 cond plug ¼″ diam; 3 15/32″ lg x 9/16″ wd x 13/16″ h overall; WECo #218–A.	In upper and lower reperforator	2Z5524
	JACK, telephone: for 2 cond plug WECo #47; 3 15/32″ lg x 13/16″ wd x 9/16″ h overall; J–8 contact arrangement; WECo #303A.	Mounted in monitor jack box	4T91859
	PAD, silencing: felt; 11⅜″ lg x 9⅛″ wd x ¼″ thk; Booth Felt Co #47 Grey.	Placed under reperforators	4T109405
	REEL; mts on front of cabinet; c/o reel w/bracket; steel; 4¼″ diam x 1″ wd overall; Western Union #1046A.	Number tape reel	4T1000–3
C–3467	SPRING: helical extension type; 0.031″ diam music wire; 3″ lg x ¾″ diam; 50 turns; ¾″ diam mtg plate w/#8–32 tapped hole in ctr ea end; Western Union dwg #10114.	For tape holder	4T1000–7
	TAPE: teletype; 1 1/16″ wd; white; fiber board core, 8″ OD roll, 2″ ID; Fed Spec #UU–P–547A, type 3.	Blank recording tape	4A2702
	TERMINAL, lug: ring type; hot tinned dipped; for #14 AWG wire; 9/16″ lg x 9/32″ wd w/5/32″ hole; Sherman #19.	Ground terminal on power cabinet.	3Z12025–5.2
	MULTIPLE TRANSMITTER DISTRIBUTOR		
	TRANSMITTER-DISTRIBUTOR: single channel; 115 v AC 50/60 cyc, or DC, 30 w, single ph, series-governed motor, 5 unit code, 60 or 100 words per min operation w/10-spot target; 16″ lg x 15″ wd x 5¾″ h overall; incl one number transmitter, Teletype code #MXD11, two message transmitters, Teletype code #MXD10, and one base, Teletype #MXB9 (this item used in the AN/TGC–1A only).	Provides one number transmitter and two message transmitters to provide continuous transmission.	4T1000–10
	TRANSMITTER-DISTRIBUTOR: single channel; 115 v AC 50/60 cyc, or DC, 30 w, single ph, series-governed motor, 5 unit code, 60 words per min operation w/10-spot target; 16″ lg x 15″ wd x 5¾″ h overall; incl one number transmitter, Western Union #MXD–9, two message transmitters, Western Union #MXD–8 and one base, Western Union #MXB–8 (this item used in the AN/TGC–1 only).	Same function as above	4T1000–1/C1

Ref. symbol	Name of part and description	Function of part	Signal Corps stock No.
	MULTIPLE TRANSMITTER DISTRIBUTOR —Continued		
	SCREW, machine: flat Fil H; steel; #6–40 thd; ½″ lg; thd portion ⅜″ lg; head 7/32″ OD x ⅛″ thk.	Base plate	4T33–158
	NUT, hexagon: steel; #10–32 thd; 3/32″ thk; 5/16″ across flats.	Center contact governor assembly.	4T34–4
	NUT, hexagon: steel; #2–56 thd; 1/16″ thk; 3/16″ across flats (this item used in the AN/TGC–1A only).	Contact part	4T34–11
	SPRING: helical extension; 0.010″ music wire; 37 turns; ⅝″ lg x 0.130″ diam overall.	Selector lever assembly	4T35–70
	WASHER, flat: steel; #4; 7/64″ ID, ¼″ OD, 0.035″ thk.	Selector lever assembly. Release bar contact assembly and top plate.	4T103–27
	COIL, solenoid: electromagnet; single wound, 105 ohms DC resistance; 1⅛″ lg x 1″ wd x 1⅛″ h overall.	Base plate	4T177M
	WASHER, flat: steel; 0.120″ ID, 0.375″ OD, 0.035″ thk.	Base plate, covers	4T200–1348
	MODIFICATION KIT: consists of mtg plate, cover, and necessary hdw.	Replaces plastic tape retaining lid with steel hinged type retaining lid.	4T1000–6
	SCREW, machine: Fil H; steel; #6–40 thd; ⅜″ lg; head 7/32″ diam x 7/64″ thk.	Base plate, base (top)	4T1026
	SCREW, machine: Bind H; steel; #4–40 thd; ¼″ lg; thd portion 0.219″ lg; head ¼″ diam x 0.063″ thk.	Base plate, base (bottom)	4T1028
	SCREW, machine: R H; brass; #6–32 thd; ¼″ lg; head 0.251″ diam x 0.097″ thk.	Governor	4T1064
	SCREW, thumb: knurled head; steel; #6–40 thd; ¾″ lg; thd portion 5/16″ lg; head 9/16″ diam x 5/32″ thk; shoulder 9/32″ diam x 3/32″ thk.	Covers	4T1073
	SCREW, machine: Fil H; steel; #6–40 thd; 5/16″ lg; hd 0.217″ diam x 0.119″ thk.	Shaft assembly	4T1160
	SCREW, machine: Fil H; steel; #6–40 thd; ¼″ lg; head 0.217″ diam x 0.119″ thk.	Selector lever, filter assemblies, and base (bottom).	4T1161
	SCREW, machine: Fil H; steel; #4–40 thd; ¼″ lg; head 0.175″ diam x 0.096″ thk.	Selector lever, release bar contact assembly, feed pawl.	4T1162
	SCREW, machine: Fil H; steel; #4–40 thd; 3/16″ lg; head 0.175″ diam x 0.096″ thk.	Base plate	4T1163
	SCREW, machine: Fil H; steel; #2–56 thd; 3/16″ lg; head 0.135″ diam x 0.067″ thk.	Base plate, selector lever assembly.	4T1164
	SCREW, machine: Fil H; steel; #4–40 thd; 5/16″ lg; thd portion 9/32″ lg; head 0.176″ diam x 7/64″ thk.	Release bar contact, governor brush and speed adjusting assemblies, and letter sensing mechanism.	4T1168
	SCREW, machine: Fil H; steel; #6–40 thd; 0.438″ lg; head 0.217″ diam x 0.119″ thk.	Base plate	4T1169
	SCREW, machine: flat top Bind H; steel; #4–40 thd; 11/32″ lg; thd portion 9/32″ lg; head ¼″ diam 3/32″ thk; shoulder 0.155″ diam x 1/16″ lg.	Base plate	4T1174
	SCREW, machine: Fil H; steel; #10–32 thd; 1⅜″ lg; thd portion 1¼″ lg; head 0.303″ diam x 0.164″ thk.	Base plate (top), base (bottom)	4T1258

Ref. symbol	Name of part and description	Function of part	Signal Corps stock No.
	MULTIPLE TRANSMITTER DISTRIBUTOR —Continued		
	SCREW, machine: FH; steel; #6–40 thd; 0.313″ lg; thd portion 0.237″ lg; head 0.268″ OD x 0.076″ thk.	Base plate	4T1268
	SCREW, machine: Fil H; steel; #6–40 thd; ½″ lg; head 7/32″ diam x 7/64″ thk.	Shaft assembly, base (top), base (bottom).	4T1269
	WASHER, lock: steel; split ring type; 0.141″ ID, 0.251″ OD, 0.031″ thk.		6L73006
	WASHER, flat: brass; 7/64″ ID, ¼″ OD, 0.034″ thk	Base plate, base (bottom)	4T2438
	INSULATOR, plate: rectangular; bakelite; 2⅜″ lg x 0.438″ wd x 0.094″ thk over-all.	Contact lever assembly	4T2504
	BUSHING: spacer; steel; 0.189″ ID, 0.312″ OD, 0.154″ thk.	Contact lever assembly	4T2526
	INSULATOR, bushing: tubular; bakelite; 9/64″ ID, 0.215″ OD, 5/16″ lg.	Contact lever assembly	4T2529
	WASHER, lock: steel; split ring type; 0.200″ ID, 19/64″ OD, 0.047″ thk.	Base plate, base (bottom) motor, center contact governor assembly.	4T2669
	SPRING: helical extension; 0.014″ music wire; 21 turns; 9/16″ lg x 0.181″ diam overall.	In base plate	4T2836
	WASHER, flat: steel; 3/16″ ID, 7/16″ OD, 0.053″ thk.	In base plate, resistor bracket assembly, center contact governor assembly.	4T3438
	NUT, hexagon: steel; #6–40 thd; 3/32″ thk; ¼″ across flats.	In selector lever contact lever, top plate, letters-sensing mechanism, and motor-governor filter assemblies.	4T3598
	NUT, hexagon: steel; #4–40 thd; 3/32″ thk; 3/16″ across flats.	In base plate, release bar, letters-sensing mechanism, and covers (top).	4T3599
	SPRING: helical extension; 0.024″ music wire; 26 turns; 1″ lg x 0.223″ diam overall.	Letters-sensing mechanism	4T3610
	WASHER, lock: steel; split ring type; 0.120″ ID, 0.210″ OD, 0.035″ thk.		4T3640
	SPRING: helical extension; 0.013″ music wire; 26 turns; 9/16″ lg x 5/32″ diam overall.	In selector lever assembly	4T4703
	BEARING, ball: single row radial; 0.5118″ bore, 1.1811″ OD x 0.2756″ wd.	In motor unit assembly	4T5061
	SCREW, machine: Fil H; steel; #2–56 thd; ¼″ lg; head 0.135″ diam x 0.068″ thk (this item used in the AN/TGC–1A only).		4T5740
	CONTACT ASSEMBLY, switch: governor; single tungsten cont ¼″ OD x 1/16″ thk; 1 29/32″ lg x 5/8″ h x 3/8″ thk overall.	Contact spring in center contact governor assembly.	4T6314
	CONTRACT, governor: screw type; #6–32 screw w/¼″ diam tungsten cont welded to head; 0.385″ lg overall.	Contact screw in center contact governor assembly.	4T6320
	SPRING: helical extension; 0.033″ music wire; 19 turns; 1 3/16″ lg x 0.259″ diam overall.	In center contact governor assembly.	4T6323
	WHEEL ASSEMBLY: leather disk w/steel plate ea side, 0.341″ diam bearing hub w/shoulder, adjusting screw inside hub w/stop pin and spring hole at end; 1.464″ diam x 1″ d overall.	Governor adjuster	4T6324
	SCREW, machine: slotted hex head; steel; #6–32 thd; 0.344″ lg; head 0.187″ across flats x 0.094″ thk.	In clamp of center contact governor assembly.	4T6344

Ref. symbol	Name of part and description	Function of part	Signal Corps stock No.
	MULTIPLE TRANSMITTER DISTRIBUTOR —Continued		
	NUT, hexagon: steel; #6–32 NC–2; 3/32″ thk; 1/4″ across flats.	In center contact governor assembly.	6L3606–32–4.3 (formerly 4T-6345).
	SCREW, machine: slotted hex head; steel; #6–40 thd; 5/16″ lg; head 1/4″ across flats x 3/32″ thk.	Base plate, shaft assembly, motor, governor brush, and speed-adjusting bracket assembly.	4T6746
	SCREW, machine: slotted hex head; steel; #6–40 thd; 5/8″ lg; head 1/4″ across flats x 3/32″ thk.	Contact lever assembly, base (top).	4T6811
	WASHER, flat: steel; 9/64″ ID, 5/16″ OD, 0.032″ thk.		4T7002
	ROLLER, lever: steel; 0.189″ ID, 0.312″ OD, 0.117″ lg.	Feed lever	4T7027
	LEVER: steel; gooseneck shape; 1.578″ lg x 1.536″ wd x 0.065″ thk overall.	Operates keyboard transmitter contacts.	4T7318
	GEAR: clutch; steel; 30 ratchet teeth on one side; 5/8″ diam x 0.412″ d overall, 0.376″ shaft hole, counterbored on tooth end.	In shaft assembly	4T7389
	GEAR: steel; 30 ratchet teeth on one side; 3/4″ diam x 3/4″ d overall, 0.376″ shaft hole, counterbored on tooth end.	Clutch gear	4T7391
	SCREW, pilot: Fil H; steel; #4–40 thd; 0.422″ lg; thd portion 0.135″ lg; head 0.188″ diam x 0.078″ thk.	In top plate (bottom)	4T7678
	ROLLER, lever: steel; 0.080″ ID, 0.125″ OD, x 0.172″ lg.	In top plate (bottom)	4T7679
	BRUSH, electrical contact: carbon; rectangular, 3/4″ lg x 3/8″ wd x 1/4″ thk w/compression spring and end cap, 2 3/16″ lg x 3/8″ OD overall.	In governed-motor unit	4T8094
	SCREW, machine: Bind H; steel; #6–40 thd; 1/4″ lg; head 1/4″ diam x 1/16″ thk.	In base plate, shaft assembly covers, and top plate.	4T8543
	SHIM: contact mtg; steel; 0.140″ ID, 5/16″ OD, 0.005″ thk.	Base plate, selector lever assemblies, and top plate.	4T8896
	WASHER, flat: steel; 1/8″ ID, 1/4″ OD, 0.039″ thk	In top plate (bottom)	4T41675
	SCREW, machine: slotted hex head; steel; #10–32 thd; 9/16″ lg; thd portion 3/8″ lg; head 1/4″ across flats x 1/8″ thk.	In base plate	4T44035
	SPRING: helical extension; 0.014″ music wire; 60 turns; 1 1/8″ lg x 5/32″ diam overall.	In base plate and release bar contact assembly, and feed pawl.	4T55090
	SPRING: helical extension; 0.018″ music wire; 20 turns; 11/16″ lg x 3/16″ diam overall.	In selector lever assembly	4T60669
	CAP: contact brush; bakelite; 1/2″ lg x 21/32″ diam overall.	Brush holder in motor unit	4T70873
	SPRING: helical compression; 0.086″ music wire; 3 turns; 31/64″ lg x 1 7/64″ diam overall.	Motor end play spring	4T71999
	SCREW, pilot: Fil Bind H; steel; #6–40 thd; 1/2″ lg; thd portion 0.438″ lg; head 1/4″ diam x 0.094″ thk.	In top plate (bottom)	4T72096
	SCREW, machine: slotted hex head; steel; #6–40 thd; 3/4″ lg; thd portion 3/8″ lg; head 1/4″ across flats x 0.094″ thk.		4T72508
	WASHER, flat: felt; 1/2″ ID, 11/16″ OD, 1/16″ thk (this item used in the AN/TGC–1A only).	In main shaft assembly	4T72563

Ref. symbol	Name of part and description	Function of part	Signal Corps stock No.
	MULTIPLE TRANSMITTER DISTRIBUTOR —Continued		
	CONTACT, governor: screw type; #2–56 screw w/¼″ tungsten cont welded to head; 0.148″ lg overall.	Contact point in governor	4T72835
	WASHER, flat: felt; ⅝″ ID, 1 3/16″ OD, 3/16″ thk	In governed-motor unit	4T73232
	WASHER, flat: steel; 0.096″ ID, 0.172″ OD, 0.042″ thk.	In selector lever assembly	4T73844
	SCREW, machine: slotted hex head; steel; #6–40 thd; 7/32″ lg; head ¼″ across flats x 3/32″ thk	Selector lever and motor governor filter assemblies.	4T74059
	SCREW, machine: flat top Bind H; steel; #6–40 thd; ½″ lg; thd portion 3/16″ lg; head 5/16″ diam x 7/64″ thk; shoulder 7/32″ diam x 1/16″ lg.	In top plate (bottom)	4T74171
	SPRING: helical compression; 0.024″ music wire; 8 turns; ½″ lg x 0.243″ diam overall.	In contact lever assembly	4T75606
	WASHER, flat: steel; 3/16″ ID, 5/16″ OD, 0.011″ thk.	In contact lever assembly	4T75607
	SPRING: helical extension; 0.016″ music wire; 39 turns; 0.1500″ OD x 0.924″ lg overall (this item used in the AN/TGC–1A only).	Feed pawl spring	4T76379
	BEARING, sleeve: headless; steel; 0.140″ ID, 0.250″ OD, 0.218″ lg overall.	Bushing in top plate	4T76532
	SCREW, machine: Bind H; steel; #4–48 thd; 7/32″ lg; head ¼″ diam x 3/32″ thk.	In governed-motor unit	4T78025
	SCREW, machine: slotted hex head; steel; #10–32 thd; ⅝″ lg; head 5/16″ across flats x ⅛″ thk.	Base (bottom), motor	4T78301
	ARM ASSEMBLY: nickel silver or steel; 3⅜″ lg x 7/16″ wd x 19/32″ h overall w/¼″ diam x ¼″ lg cont brush soldered to one end, flat spring on opposite end.	Contact for outer disk, governor brush and speed adjusting assembly.	4T78399
	ARM ASSEMBLY: nickel silver or steel; 3⅜″ lg x 7/16″ wd x 19/32″ h overall w/¼″ diam x ¼″ lg cont brush soldered to one end, flat spring on opposite end.	Contact for inner disk; governor brush and speed adjusting assembly.	4T78400
	BRUSH, electrical contact: carbon; 15/64″ lg x ¼″ diam w/spring ⅛″ diam x 1/16″ lg.	In governor brush and speed adjusting bracket.	4T78403
	CONTACT, governor: screw type; #10–32 screw w/cont welded to head; 27/32″ lg overall.	Outer contact disk in center contact governor assembly.	4T78443
	COVER: governor center cont; steel, bakelite insulation; 3¼″ diam x ½″ d overall.	Center contact governor assembly.	4T78451
	CONTACT, governor: flat spring; hook shape; 1 15/64″ lg x 0.531″ wd x 43/64″ d overall w/0.159″ thk nickel silver cont on one end.	Outer disk contact spring	4T78496
	CONTACT, governor: flat spring; hook shape; 1 15/64″ lg x 17/32″ wd x 25/32″ d overall w/0.159″ thk nickel silver cont on one end.	Inner disk contact spring	4T78497
	SCREW, machine: spcl head; steel; #4–40 thd; 17/32″ lg; thd portion of 3/16″ lg; head ¼″ diam x 3/32″ thk; shoulder 5/32″ diam x 5/16″ lg.	Feed pawl	4T80283
	WASHER, flat: steel; ¾″ ID, 1 3/32″ OD, 0.035″ thk.	In 6708 motor	4T80312
	SCREW, machine: hex head; steel; #6–40 thd; ¼″ lg; head ¼″ across flats x 3/32″ thk.	In governor brush and speed adjusting bracket, and base plate.	4T80444
	SPRING: helical compression; 0.038″ music wire; 5½ turns; 0.637″ lg x 0.733″ diam overall.	In shaft assembly	4T80471

Ref. symbol	Name of part and description	Function of part	Signal Corps stock No.
	MULTIPLE TRANSMITTER DISTRIBUTOR —Continued		
	SCREW, machine: hex head; steel; #4–40 thd; ¼″ lg; head 0.188″ across flats x 3/32″ thk.	In top plate (top), top plate (bottom).	4T80957
	SCREW, machine: slotted hex head; steel; #6–40 thd; 7/16″ lg; head ¼″ across flats x 3/32″ thk.	In base and motor governor filter assembly.	4T82440
	WASHER, flat: steel; 0.196″ ID, 0.625″ OD, 0.065″ thk.	In 6708 motor	4T84579
	STUD, steel; stud end #6–40 thd 5/16″ lg, bearing end 1.034″ lg x 3/16″ OD w/#6–40 thd 0.219″ lg; 1.502″ lg x 0.355″ OD overall.	In letters-sensing mechanism	4T86209
	SCREW, set: slotted; headless; steel; #10–32 thd; 0.188″ lg; oval point.	In base (top)	4T86341
	INSULATOR, bushing: tubular; 0.095″ ID, 0.142″ OD, 0.093″ lg w/shoulder 0.219″ OD x 0.049″ thk; 0.140″ lg x 0.219″ OD overall.	In governor	4T86868
	WICK: oiling; felt; 3/32″ diam x 3/16″ lg	In base plate	4T89881
	FITTING: 90° angle; 25/32″ lg x 13/32″ wd x 19/32″ h overall w/shank thd #10–32, 5/8″ lg from vert ctr.	For pressure lubrication	4T89896
	NUT, hexagon: steel; #10–32 thd; 0.094″ thk; ¼″ across flats.	In base plate	4T89897
	BEARING, sleeve: steel; 0.113″ ID, 0.171″ OD, 0.143″ lg overall w/head 0.312″ OD x 0.073″ thk.	Bushing in release bar contact assembly.	4T90539
	WASHER, lock: steel; internal teeth; for #2 screw, 3/16″ OD x 0.010″ thk.	Selector lever assembly	4T90791
	SCREW, machine: straight side Bind H; steel; ¼″–20 thd; 0.469″ lg; thd portion 0.219″ lg; head 3/8″ diam x 0.109″ thk; shoulder 9/32″ diam x ¼″ lg.	Base (bottom)	4T90952
	SHIM: governor; steel; 3/8″ ID, 13/16″ OD, 0.012″ thk.	In 6708 motor	4T91617
	PIN, clevis: 0.029″ music wire; 3/8″ lg x 1/8″ wd	For floating lever	4T92175
	BUSHING: spacer; steel; 9/64″ ID, ¼″ OD, 3/16″ thk.	In base plate	4T92685
	ARMATURE, electromagnet: soft iron w/brass plate; 1 1/16″ lg x ½″ wd x 1/8″ thk w/two #4–40 tapped holes on top side.	In base plate	4T93463
	WICK: oiling; felt; 3/16″ diam x 7/8″ lg	In base (top)	4T97481
	PLATE, mounting: right side; steel; 3.334″ lg x 1½″ wd x 5/16″ thk.	Side frame of base plate and shaft assembly.	4T97501
	PLATE, mounting: left side; steel; 3.334″ lg x 1½″ wd x 3/8″ thk.	Side frame of base plate and shaft assembly.	4T97503
	SHAFT: cam; steel; 4 53/64″ lg x 3/8″ diam overall	In distributor shaft assembly	4T97506
	BAR, guide: brass; 4 15/32″ lg x 1 1/64″ wd x 9/16″ thk	Selector lever guide	4T97512
	BAIL: 0.065″ steel; U-shaped; 1 5/8″ lg x 0.702″ wd x 0.762″ h overall.	Selector lever assembly	4T97514
	ARM: steel; irregular shape; 2 3/64″ lg x 0.801″ wd x 0.065″ thk.	Extension selector lever bail	4T97515
	BEARING, sleeve: headless type; steel; 0.127″ ID, 0.186″ OD, 0.135″ lg.	Selector lever assembly	4T97516
	LEVER: steel; L-shaped; long leg 1.793″ lg, short leg 1.662″ lg x 0.319″ overall.	Tape-out lever	4T97523
	LEVER: steel; 2.371″ lg x 7/8″ wd x 0.068″ thk overall.	Feed pawl	4T97525

Ref. symbol	Name of part and description	Function of part	Signal Corps stock No.
	MULTIPLE TRANSMITTER DISTRIBUTOR —Continued		
	LEVER: steel; irregular shape; 1.564″ lg x 1.118″ wd x 0.068″ thk overall.	Feed-pawl arm	4T97526
	BRACKET: steel; 1.344″ lg x 5/16″ wd x 0.669″ thk overall; 2 mtg ears w/two 0.156″ diam holes.	For feed roll	4T97527
	LEVER: steel; 2 5/32″ lg x 1.313″ wd x 0.628″ thk overall.	Clutch lever, base plate	4T97529
	STIFFENER, contact spring: 0.010″ nickel silver grade B; 1.562″ lg x 1.375″ wd overall w/6 fingers 0.156″ wd spaced 0.063″, solder lug term one end.	In contact lever assembly	4T97531
	STIFFENER, contact spring: 0.010″ nickel silver grade B; 1.375″ lg x 0.875″ wd overall w/1 finger and 1 solder lug term.	In contact lever assembly	4T97532
	CONTACT, switch: 0.020″ nickel silver grade B; 6 cont w/bumpers; 2.062″ lg x 1.562″ wd x 0.144″ thk overall.	In contact lever assembly	4T97533
	CONTACT, switch: 0.020″ nickel silver grade B; single cont w/bumpers; 2.062″ lg x 0.875″ wd x 0.144″ thk overall.	In contact lever assembly	4T97534
	CONTACT, switch: stop type; 0.040″ nickel silver grade B; 6 cont; 1.563″ lg x 1.562″ wd x 0.107″ thk overall.	In contact lever assembly	4T97535
	CONTACT, switch: 0.403″ nickel silver grade B; single cont; 1.503″ lg x 0.875″ wd overall.	In contact lever assembly	4T97536
	LEVER: contact assembly; steel; irregular shape; 2.813″ lg x 1.849″ wd overall.	In contact lever assembly	4T97537
	PAWL: ratchet; steel; irregular shape; 1.563″ lg x 1.114″ wd x 0.188″ thk overall.	Contact lever	4T97538
	LEVER: letters oper assembly; steel; 2.252″ lg x 1.910″ wd x 0.809″ h overall.	In letters-sensing mechanism	4T97544
	LATCH, lever: steel; 1.125″ lg x 1.812″ wd x 0.065″ thk overall.	In base plate	4T97545
	SPROCKET, tape: straight feed; consists of ratchet wheel w/32 teeth, sprocket w/32 teeth, hub 0.812″ OD w/ends csk 60° for pivot; steel; 1.078″ OD x 1.313″ lg overall.	Feed roll in top plate (bottom)	4T97555
	LEVER: sensing mechanism; steel; 1.514″ lg x 1.441″ wd x 0.065″ thk overall.	Detent lever in top plate	4T97557
	GEAR: spur; bakelite; main shaft; helical; RH; 39 teeth; 22 pitch, 1.9895″ PD; 2.080″ OD, 0.502″ bore; straight face.	In base (top)	4T97576
	BEARING, sleeve: steel; 0.156″ lg overall, bushing 0.1935″ ID, 0.246″ OD, 0.086″ lg; head 0.438″ OD x 0.070″ thk.	Guide bushing in base plate	4T97583
	LEVER: steel; J-shaped; 2.203″ lg x 1.687″ wd x 0.307″ d overall.	Letters-operating release arm	4T97931
	SHIM: steel; 0.316″ ID, 1/2″ OD, 0.005″ thk	For driving clutch	4T98361
	SPRING: helical extension; 0.024″ music wire; 16 turns; 13/16″ lg x 5/16″ diam overall.	In contact lever assembly	4T98636
	FELT: lubricating; 1.438″ lg x 0.625″ wd x 0.094″ thk.	Oiling felt in base plate	4T99117
	LEVER: selector #1; steel; 1.944″ lg x 1.579″ wd x 0.200″ thk overall w/offset to right.	In selector lever assembly	4T99259
	LEVER: selector #2; steel; 1.944″ lg x 1.579″ wd x 0.079″ thk overall w/offset to right.	In selector lever assembly	4T99260

Ref. symbol	Name of part and description	Function of part	Signal Corps stock No.
	MULTIPLE TRANSMITTER DISTRIBUTOR —Continued		
	LEVER: selector #3; steel; 1.944″ lg x 1.579″ wd x 0.079″ thk overall w/offset to left.	In selector lever assembly	4T99261
	LEVER: selector #4; steel; 1.944″ lg x 1.579″ wd x 0.200″ thk overall w/offset to left.	In selector lever assembly.	4T99262
	LEVER: selector #5; steel; 1.944″ lg x 1.579″ wd x 0.319″ thk overall w/offset to left.	In selector lever assembly	4T99263
	SCREW, machine: hex head; steel; #6-40 thd; 0.294″ lg; thd portion 0.147″ lg; head ¼″ across flats x 0.062″ thk; shoulder 0.187″ diam x 0.122″ lg.	Feed pawl part	4T99278
	GUIDE, punch: tape cont pin; steel; L-shaped; 1.188″ lg x ½″ wd x 5/16″ thk overall.	In top plate (bottom)	4T99283
	SPRING: helical extension; 0.024″ music wire; 14 turns; 0.68¾″ lg x 0.200″ diam overall.	Feed pawl part	4T101385
	SPRING: helical extension; 0.018″ music wire; 15 turns; 0.512″ lg x 0.155″ diam overall.	In top plate (bottom)	4T101386
	WICK: oiling; felt; 3/32″ diam x ¼″ lg	In base plate	4T101591
	CAM ASSEMBLY: steel; 2 25/32″ lg x 0.830″ OD overall.	Main keyboard shaft	4T101766
	SCREW, machine: straight side Bind H; brass; #8-32 thd; 5/16″ lg; head 0.335″ diam x 3/32″ thk.	In base (top)	4T101833
	SCREW, machine: Fil H; steel; #4-40 thd; 0.281″ lg; head 0.177″ diam x 0.079″ thk.	In top plate (bottom)	4T102052
	WASHER, flat: steel; 0.078″ ID, 0.188″ OD, 0.012″ thk.	In top plate (bottom)	4T102839
	INSULATOR: bakelite; 0.147″ ID, 0.215″ OD, 0.514″ lg (this item used in the AN/TGC–1A only).	Bushing	4T109359
	GEAR: spur; bakelite; helical; LH; 53 teeth; 30 pitch, 1.9367″ PD; 2.0033″ OD, 0.502″ bore; straight face.	Main drive gear	4T110651
	CABLE ASSEMBLY: 8 #20 AWG stranded copper cond, rubber jacketed; 37″ lg; Jones HB #P–308–CCT, 8 cont male connector one end, other end tinned.	Power cable assembly	4T110766
	CABLE ASSEMBLY: 2 #18 AWG stranded copper cond, rubber jacketed; 45¼″ lg excl termination; Hubbell #9202, 2 cont male connector one end, 2 ring type term other end.	Power cable assembly	4T110768
	SPRING: flat; steel; 1⅞″ lg x ¼″ wd x ⅛″ d overall.	Tape lid	4T110777
	BRACKET: L-shaped; steel; long leg 1″ lg, short leg 0.845″ lg x 0.532″ wd overall.	Tape lid mounting	4T110778
	COVER: steel; 2 11/32″ lg x 1″ wd x 15/32″ d overall	Hinged tape retainer	4T110780
	BRACKET: U-shaped; steel; 1.315″ lg x 7/16″ wd x 0.531″ d x 0.095″ thk overall.	Tape lid mounting	4T110781
	MODIFICATION KIT MX–759/FG: for Teletype model #MXB8 transmitter-distributor base (this item used in the AN/TGC–1 only).	To convert transmitter-distributor from 60 to 100 words per minute operation.	4T111263
	WORM, gear: steel; 12 teeth, 28 pitch, 1.2703″ PD, 3.25 to 1 ratio; 1.625″ lg overall, gear 0.750″ lg x 1.3417″ OD, shank 0.875″ lg x 0.688″ diam, 0.312″ diam bore x 0.062″d (this item used in the AN/TGC–1A only).	Pinion gear	4T111264

Ref. symbol	Name of part and description	Function of part	Signal Corps stock No.
	MULTIPLE TRANSMITTER DISTRIBUTOR —Continued		
	GEAR: helical; canvas base bakelite; 39 teeth; 28 pitch, 1.4796″ PD; 0.502″ ID, 1.551″ OD, ½″ thk; straight face (this item used in the AN/TGC–1A only).		4T111265
	SPRING: helical extension; 0.014″ music wire; 16 turns; 0.181″ OD x 0.516″ lg overall (this item used in the AN/TGC–1A only).	Armature spring	4T111342
	STIFFENER, contact spring: steel L-shaped; 1.532″ lg x 0.875″ wd x 0.065″ thk overall (this item used in the AN/TGC–1A only).	Contact part	4T112048
	PLATE, cover: steel; 2.375″ lg x 0.532″ wd x 0.050″ thk overall (this item used in the AN/-TGC–1A only).	Contact part	4T112497
	SCREW, machine: slot drive, FH; steel; #6–40 thd; 0.750″ lg overall; thd portion 0.375″ lg; head 0.076″ thk x 0.268″ diam (this item used in the AN/TGC–1A only).	In contact assembly	4T112498
	INSULATOR: bakelite; 0.147″ ID, 0.215″ OD, 0.485″ lg overall (this item used in the AN/-TGC–1A only).	Bushing (contact part)	4T112499
	STIFFENER: steel; 1.437″ lg x 1.532″ wd x 0.065″ thk overall (this item used in the AN/TGC–1A only).	Contact part	4T204370
	MODIFICATION KIT MX–762/FG: for Teletype models #MXD8 and #MXD9 transmitter-distributor (this item used in the AN/TGC–1 only).	To convert transmitter-distributor from 60 to 100 words per minute operation.	4T205062
	CONTROL UNIT, power: 110 v DC or 110 v AC, 50/60 cyc, single ph, 5 amp; 5″ wd x 10″ h x 10¾″ d overall; Western Union dwg #108245–3.	For power to teletypewriter station equipment.	4T1000–9
R	CONNECTOR, plug: female; 2 cont; straight; 1⅝″ lg x 1⅜″ diam overall; Hubbell #7257.	A-c power and multiple cords	6Z3150–4
K	CONNECTOR, plug: female; 2 cont; straight; 1.655″ lg x 1.375″ diam overall; Hubbell #7259.	Power connector for equipment drawer.	6Z7568–1
M	CONNECTOR, plug: male; 2 cont; straight; 1.218″ lg less cont x 1.375″ diam overall; Hubbell #9357.	A-c power and multiple cords	6Z7591–20
PO–2	CONNECTOR, receptacle: female; 2 cont; straight; 1.187″ lg x 2.031″ diam overall; mtg flange w/two 0.136″ diam holes on 1¾″ mtg/c; Hubbell #9819.	Female multiple plug	6Z7785–1
PO–1	CONNECTOR, receptacle: male; 2 cont; straight; 1.187″ x 2.031″ diam overall; mtg flange w/two 0.136″ diam holes on 1¾″ mtg/c; Hubbell #9808.	A-c input	6Z8364P
F–1 thru F–5	FUSE, plug: 1.6 amp, 125 v; one-time; standard screw base; 1$\frac{7}{32}$″ lg x 1⅛″ diam; Buss #7016.	Protects reperforator equipment	3Z2601.31
FB–3	HOLDER, fuse: cutout type; for 1 Edison plug fuse; porcelain base; 2 pole, 30 amp, 125 v w/solid neutral; 2½″ lg x 2¼″ wd x 1½″ h overall; 2 screw term; Bryant #H120.	Holds main fuse F–5	3Z2857

Ref. symbol	Name of part and description	Function of part	Signal Corps stock No.
	RECTIFIER		
	RECTIFIER, metallic: selenium, power pack; input 115 v ac, 50/60 cyc, 0.68 amp; output 110 v dc, 0.600 amp; 15⅜″ lg x 7″ h x 6″ d; Western Union #54A; Bunnell #107841–2.	Provides source of d-c current	4T1000–1/C3
	CAPACITOR, fixed: electrolytic; 500 mf; 200 vdcw; 4½″ lg x 2″ diam; HS metal case; 2 solder lug term on end; Dubilier #SA–10152.	Filter	3DB500–17
	CONNECTOR, plug: female; 2 cont; straight; 1⅜″ lg x $^{61}/_{64}$″ diam overall; Hubbell #7259.	D-c output	6Z7568–1
	CONNECTOR, plug: male; 2 cont; straight; 1¼″ lg x 1$^{9}/_{16}$″ diam excl cont; Hubbell #7057.	A-c input	6Z1727
	REACTOR: swinging choke; inductance 2.5 hy, 0.1 cap dc, 1.0 hy, 0.3 amp dc, 0.42 hy, 0.5 amp dc, 0.25 hy, 0.75 amp dc; 3 ohms dc; 1500 v dc; open frame; 3¾″ lg x 3¼″ wd x 3″ d; two #18 AGW wire leads on bottom; ADC per Western Union spec #6719A; Bunnell #109406.	In output filtering circuit	4T109406
	RECTIFIER, metallic: selenium; input 153 to 162 v ac, 60 cyc; output 117 v dc, 1.2 amp max; 36 No. 5 disks 67 mm diam; Fed Tele & Rad #5B9AV1; Bunnell #109407.	D-c power source	3H4859–22
FB–1, FB–2	HOLDER, fuse: cutout type; for 2 Edison plug fuses; 30 amp, 125 v; 2$^{15}/_{16}$″ lg x 2$^{9}/_{16}$″ wd; Bryant #H220.	For fuses F–1 thru F–4	3Z2831–3
GS–1, GS–2	KNOB: bar; black phenolic; for ¼″ diam shaft; single #8–32 setscrew; white engraved line on pointer; 1¼″ lg x ⅝″ h x ⅝″ rad; Croname #286.	On a-c, d-c switches for power cabinet.	2Z5848
L	RESISTOR, fixed: WW; 40 ohms ± 5%; 74 w; 6″ lg x 1$^{5}/_{16}$″ diam; 2 radial lug term; JAN type #RW43G400.	In a-c motor circuits	3RW15907
GS–1, GS–2	SWITCH, toggle: DPDT; 3 amp, 250 v; bakelite body; 1$^{13}/_{16}$″ lg x $^{11}/_{16}$″ wd x 1¾″ d overall; AH&H #81012.	A-c, d-c switches	3Z9858–3
PS	SWITCH, toggle: DPST; 20 amp, 250 v; bakelite body; 2$^{41}/_{64}$″ lg x 1$^{9}/_{32}$″ wd x 1$^{17}/_{64}$″ d overall; C–H #7402K3.	Main power switch	3Z9847–1
	TRANSFORMER, power: plate; pri 125 v, 60 cyc, single ph, tapped at 120/115/110/105 v; secd output 160 v, 50 ma, tapped at 145 v; open metal case; 4½″ lg x 3¾″ wd x 4¾″ h; 8 solder lug term on top; Western Union spec #6720–B trans f #121–B; Bunnell #109437.	Power transformer	2Z9612.242
	RELAY CONTROL UNIT		
	CONTROL: relay control unit; 23¾″ wd x 14½″ h x 23⅛″ d overall; Western Union dwg #108229–9.	Telegraph line control	4T1000–/C5
CTR–1, CTR–2	BOARD, terminal: 12 solder lug term; bakelite; 3¾″ lg x ⅞″ wd x $^{5}/_{16}$″ thk; Jones HB #2012.	Connects capacitors and resistors.	2Z9412.66
LRS–1, LRS–2	BOARD, terminal: 2 double screw term; bakelite; 1¾″ lg x 1⅛″ wd x ½″ thk; Jones HB #2–141.	Main line connections	2Z9402.44
LR–1 thru LR–4	BOARD, terminal: connecting block; 8 term; composition; 2$^{31}/_{64}$″ lg x 2$^{3}/_{32}$″ wd x 1$^{25}/_{32}$″ thk; WECo #18B.	For 255A relays	4E318B

Ref. symbol	Name of part and description	Function of part	Signal Corps stock No.
	RELAY CONTROL UNIT—Continued		
C–1 thru C–8	CAPACITOR, fixed: paper; 200,000 mmf ±20%; 600 vdcw; 2⅛″ lg x 1 3/16″ diam; wax impr; 2 axial wire leads; Dubilier #DT–6P2.	Filters	3DA200–45
	CAPACITOR, fixed: paper; 2 mf+20%−10%; 600 vdcw; HS metal case; 1¼″ lg x 1¼″ wd x 2″ h; 2 solder lug term on top; Tobe #FM–602 (this item used in the AN/TGC–1A only).		3DB2.602
PO	CONNECTOR, receptacle: male; 2 cont; straight; 1 1/16″ lg x 1⅜″ diam overall; mtg flange w/two 0.136″ diam holes on 1¾″ mtg/c; Hubbell #9808.	Connects power cabinet to relay drawer.	6Z8364P
P–1	CONNECTOR, receptacle: male; 27 flat cont blades; straight; 2⅞″ lg x 1″ wd x ½″ h excl cont; Jones HB #P–327AB.	Line terminal connectors	2Z7137. 1
P–2	CONNECTOR, receptacle: male; 30 flat cont blades; straight; 3 3/16″ lg x 2″ wd x ¾″ d overall; Jones HB #P–330AB.	Line terminal connectors	2Z3045–1
F	FUSE, plug: 1.6 amp, 125 v; one-time; standard screw base; 1 7/32″ lg x 1⅛″ diam; Buss #7016.	Main line protection	3Z2601. 31
FB	HOLDER, fuse: cutout type; for 1 Edison plug fuse; porcelain base; 2 pole, 30 amps, 125 v w/solid neutral; 2½″ lg x 2¼″ wd overall; Bryant #H120.	Holder for above fuse	3Z2857
SA, SB	KNOB: bar; black phenolic; for ¼″ diam shaft; single #8–32 setscrew; white engraved line on pointer; 1¼″ lg x ⅝″ h x ⅝″ rad; Croname #286.	For 2- and 5-section rotary switches.	2Z5848
RC	RELAY, armature: cont arrangement 3A1D; 3 amp, 150 v AC; 2 windings; concentric coil rated 46 v DC, 1300 ohms and 1250 ohms; 4″ lg x 1¼″ wd x 2¼″ h overall; fast acting; Clare CP #17132; Bunnell #108819.	Operates alarm lamp	2Z7595–4
RR–2	RELAY, armature: cont arrangement 1B1C1D; 3 amp, 150 v AC; double winding; concentric coil oper current 0.024 amp, 140 and 1300 ohms DC resistance; 4″ lg x 1 7/32″ wd x 2¼″ h overall; slow acting; Clare CP–G 21935; Western Union #202741; Bunnell #108691.	Feed-out key relay	4C7715–3
RA, RB	RELAY, armature: cont arrangement 1B1C and 1B1C1A; 3 amp, 150 v AC; double concentric wound coils, 140 ohms and 1300 ohms DC resistance; 4″ lg x 1 7/32″ wd x 2¼″ h overall; slow acting; Clare CP #H–21935; Bunnell #108690.	Controls transmitters	4C7715–4
RNN	RELAY, armature: cont arrangement 2B1A; 3 amp, 150 v AC; single winding, 2000 ohms DC resistance, 46 v DC; 4″ lg x 1 7/32″ wd x 2¼″ h overall; slow acting; Clare CP #E–21935; Bunnell #108816.	Controlled by RN	4C7715–5
RBK–2	RELAY, armature: cont arrangement 1B3A; 3 amp, 150 v AC; single winding, 2000 ohms DC resistance, 46 v DC; 4″ lg x 1¼″ wd x 2¼″ h overall; slow acting; Clare Cp #D–21935; Bunnell #108817.	Operated by release key	4C7715–6
RBK–1	RELAY, armature: cont arrangement 1A; 3 amp, 150 v AC; single winding, 2250 ohms DC resistance; 4″ lg x 1 7/32″ wd x 2¼″ h overall; slow acting; Clare CP #F–21935; Bunnell #108692.	Operates break lamp	4C7715–7

Ref. symbol	Name of part and description	Function of part	Signal Corps stock No.
	RELAY CONTROL UNIT—Continued		
RN	RELAY, armature: cont arrangement 2B; 3 amp, 150 v AC; single winding, oper current 3 amp, 550 ohms DC resistance, 46 v DC; 4″ lg x 1¼″ wd x 2¼″ h overall; fast acting; Clare CP #C-21935; Bunnell #108625.	Transmitter control relay	4C7715–8
RR–1	RELAY, armature: cont arrangement 1B1D; 3 amp, 150 v AC; single winding, oper current 0.014 amp, 550 ohms DC resistance; 4″ lg x 1¼″ wd x 2¼″ h overall; fast acting; Clare CP #B–21935; Bunnell #108818.	Feed-out key relay	4C7715–9
LR–1 thru LR–4	RELAY, armature: SPDT, polarized; 2 amp 110 v DC, parallel windings, 136 ohms ea winding oper on 5 ma min DC; 5 25/32″ lg x 2 1/16″ wd x 2 1/16″ h overall; fast acting; WECo #255A.	LR–1 and LR–2 are transmitting relays; LR–3 and LR–4 are receiving relays.	4TRY30
R–24 top	RESISTOR, fixed: WW; 200 ohms ±5%; 25 w; 2″ lg x ⅝″ diam; 2 radial lug term; WL type 2″ A.	Limits current in relay RN	3Z5000–4
R–3, R–4, R–17, R–18	RESISTOR, fixed: WW; 250 ohms ±5%; 30 w; 3″ lg x 29/32″ diam; 2 radial lug term; JAN type RW40G251.	Limiters for line terminal strip	3RW20709
R–14 top	RESISTOR, fixed: WW; 800 ohms ±5%; 25 w; 2″ lg x ⅝″ diam; 2 radial lug term; WL type 2″ A.	Current limiter for relays RA and RB.	3Z5380.3
CR–1 thru CR–8	RESISTOR, fixed: WW; 1000 ohms ±10%; 1 w; 1¼″ lg x ¼″ diam; 2 axial wire leads; IRC type #3BW–1.	Current limiters in capacitors across relay contacts.	3Z6100–53
R–16 top	RESISTOR, fixed: WW; 1000 ohms ±5%; 25 w; tapped at 500 ohms; 2″ lg x ⅝″ diam; 3 radial lug term; WL type 2″ A.	Current limiter in winding of RBK–2.	3Z5410.21
R–13	RESISTOR, fixed: WW; 1300 ohms ±5%; 30 w; 3″ lg x 29/32″ diam; 2 radial lug term; JAN type RW40G142.	Current limiter in RA circuits	3RW25208
R–14 bottom	RESISTOR, fixed: WW; 1500 ohms ±5%; 25 w; 2″ lg x ⅝″ diam; 2 radial lug term; WL type 2″ A.	Limits bell alarm circuit current	3Z5415. 9
R–12	RESISTOR, fixed: WW; 1800 ohms ±5%; 30 w; 3″ lg x 29/32″ diam; 2 radial lug term; JAN type RW40G182.	Current limiter in contact circuits of RB.	3RW25806
R–11	RESISTOR, fixed: WW; 1800 ohms ±5%; 40 w; tapped at 800 ohms; 3½″ lg x ¾″ diam; 3 radial lug term; WL type 3½″ B.	Current limiter for RB and RN and controls current in transmitter magnets.	3Z5418. 1
R–22(2) R–23(2)	RESISTOR, fixed: WW; 2000 ohms ±5%; 16 w; 2″ lg x 19/32″ diam; 2 radial lug term; JAN type RW32G202.	Current limiters in bias circuit of receiving and transmitting relays.	3RW26109
R–6, R–16 bottom, R–19 top	RESISTOR, fixed: WW; 2000 ohms ±5%; 25 w; tapped at 1000 ohms; 2″ lg x ⅝″ diam; 3 radial lug term; WL type 2″ A.	Current limiter in RA and RB relays.	3Z5420. 20
R–15 top, R–24 bottom	RESISTOR, fixed: WW; 3000 ohms ±5%; 25 w; tapped at 1500 ohms; 2″ lg x ⅝″ diam; 3 radial lug term; WL type 2″ A.	----------	3Z5430. 15
R–1, R–2, R–9, R–10	RESISTOR, fixed: WW; 3100 ohms ±5%; 30 w; tapped at 1500 ohms; 3″ lg x 29/32″ diam; 3 radial lug term; JAN type RW40G312T.	Current limiters in RBK–1, RC, RR–1 relays, and to line terminal strip.	3RW27308

Ref. symbol	Name of part and description	Function of part	Signal Corps stock No.
	RELAY CONTROL UNIT—Continued		
R–5(2), R–15 bottom, R–19 bottom	RESISTOR, fixed: WW; 4000 ohms ±5%; 25 w; tapped at 2000 ohms; 2″ lg x 5/8″ diam; 3 radial lug term; WL type 2″ A.	Same as R–22. R–19 is current limiter in bias and line winding of LR–1 and LR–2. R–15 is current limiter in RR–2 relay.	3Z5440. 9
S–1 thru S–4	SWITCH, toggle: DPDT; 3 amp, 250 v; bakelite body; 1 13/16″ lg x 1 1/16″ wd x 1 3/4″ d overall; AH&H #82305.	Controls operate and nonoperate polar-neutral battery.	3Z9858–3
SB	SWITCH, rotary: 8 pole; 2 position: 2 sect; 1 7/8″ lg x 1 9/16″ wd x 2 1/8″ d overall; shaft 3/4″ lg FMS x 1/4″ diam w/3/8″–32 bushing 5/16″ lg; Oak type #16985–H2.	Duplex—single switch	3Z9826–20
SA	SWITCH, rotary: 20 pole, 2 position; 5 sect; 3 3/8″ lg x 2″ wd x 1 1/2″ h overall; shaft 7/16″ lg x 1/4″ diam w/3/8″–32 bushing 5/16″ lg; Oak type #27377–H5.	Split—normal switch	3Z9826–20. 1
	REPERFORATORS FPR5H193 AND FPR29GS235		
	REPERFORATOR: typing, receive only; 5 unit code; com characters arrangement w/θ in upper case P, Gothic style type pallet arrangement #193; wiring arrangement, dwg #WD1978; sync motor 110 v, 60 cyc, geared for 368 opm; 12″ lg x 12″ wd x 9″ h overall (this item used on the AN/TGC–1 only).	Furnishes copy or receives messages on perforated tape on which message also is typed.	4TFPR5H193
	REPERFORATOR: typing, receive only; 5 unit code; com characters arrangement w/θ in upper case P, Gothic style type pallet arrangement #235; wiring arrangement, dwg #WD2299; series-governed motor 110 v, 60 cyc, geared for 368 opm; 12″ lg x 1″ wd x 9″ h overall (this item used on the AN/TGC–1A only).	Same as above	4TFPR29GS235
	COIL, solenoid: electromagnet; selector; single-wound; 105 ohms DC resistance; 1 1/8″ lg x 1″ wd x 1 1/8″ h overall.	In pulling selector unit	4T177M
	SCREW, machine: Fil H; steel; #2–56; 3/8″ lg under head w/full lg thd; head 0.135″ diam x 0.068″ thk.	Holds spring retainer plate	4T33–85
	SCREW, machine: FH; iron, #2–56; 3/16″ lg w/3/32″ lg thd; head 0.160″ diam.	Holds leather on type bar backstop.	4T33–111
	SCREW, shoulder: flat top Bind H; steel; #6–40; 3/8″ lg w/1/8″ lg thd; head 3/32″ thk x 9/32″ diam.	In base plate	4T33–224
	NUT, hexagon: steel; 1/4–32; 3/32″ thk; 7/16″ across flats; special.	Base plate, punch block bracket, punch bail and vertical link bracket, and main shaft assembly.	4T34–1
	NUT, hexagon: steel; #10–32; 3/32″ thk; 5/16″ across flats.	Bell bracket assembly, main bail bracket, main shaft assembly, center contact governor assembly.	4T34–4
	NUT, hexagon: steel; #2–56; 1/16″ thk; 3/16″ across flats.	Selector unit assembly, 86933 motor unit assembly, 110846 motor unit assembly.	4T34–11
	NUT, hexagon: steel; #4–40; 1/16″ thk; 1/4″ across flats.	Bell bracket assembly. Range scale assembly.	4T34–56

Ref. symbol	Name of part and description	Function of part	Signal Corps stock No.
	REPERFORATORS FPR5H193 AND FPR29GS235—Continued		
	SPRING: extension; 0.028″ diam music wire; 5/8″ lg x 0.190″ diam overall.	Main bail bracket assembly	4T35–27
	SPRING: extension; 0.014″ diam music wire; 1⅛″ lg x 0.147″ diam overall; 58 closed turns w/hook term, indexed parallel.	Base plate	4T35–68
	PIN, straight: steel; ½″ lg x 0.078″ OD w/one end beveled.	Locks nut to gear hub	4T36–24
	WASHER, flat: steel; #4; 7/64″ ID, ¼″ OD, 0.035″ thk.	Punch block bracket assembly, punch bail and vertical link bracket assembly.	4T103–27
	ARM ASSEMBLY: detent; steel; approx 1 5/16″ lg x 7/8″ wd x 3/16″ thk overall.	Punch unit	4T122–700
	WASHER, flat: steel; 9/64″ ID, 3/8″ OD, 0.036″ thk.	Punch bail and vertical link bracket assembly.	4T123–244
	SCREW, machine: Fil H; steel; #6–40; 3/8″ lg under head w/full lg thd; head 7/32″ diam x 7/64″ thk.	Base plate, punch block assembly, punch bail and vertical link bracket assembly.	4T1026
	SCREW, machine: Bind H; steel; #4–40; ¼″ lg under head w/0.219″ lg thd; head ¼″ diam x 0.063″ thk.	Selector unit, terminal block, capacitor and resistor bracket assembly.	4T1028
	SCREW, shoulder: cheese head; steel; #6–40; 11/32″ lg thd; head ¼″ diam x 3/32″ thk; shoulder 3/16″ diam x 3/32″ lg.	Range scale assembly	4T1030
	SCREW, machine: RH; brass; #6–32; 0.250″ lg under head w/full lg thd; head 0.097″ thk x 0.251″ OD.	Center contact governor	4T1064
	SCREW, pilot: flat top Bind H; steel; ¼″–32; 5/8″ lg w/3/16″ lg thd; head 11/32″ diam x 3/32″ thk; pilot 3/16″ diam x 13/32″ lg.	Main shaft assembly. 110846 motor unit assembly.	4T1100
	SCREW, machine: Fil H; steel; #6–40; 5/16″ lg; head 0.217″ diam x 0.119″ thk.	Punch block bracket, selector unit assembly.	4T1160
	SCREW, machine: Fil H; steel; #6–40; 3/16″ lg; head 0.217″ diam x 0.119″ thk.	Punch block bracket, terminal block, capacitor and resistor bracket assembly.	4T1176
	SCREW, machine: Fil H; steel; #10–32; 1″ lg under head; head 0.304″ diam x 0.152″ thk.	Main shaft assembly	4T1245
	SCREW, machine: Fil H; steel; #6–40; 0.688″ lg under head w/full lg thd; head 0.119″ thk x 0.217″ OD.	110846 motor unit assembly	4T1272
	WASHER, lock: (see 6L73006)		4T2191
	WASHER, flat: brass; 7/64″ ID, ¼″ OD, 0.034″ thk.	Selector unit assembly. Resistor bracket assembly.	4T2438
	WASHER, lock: spring steel; 17/64″ ID, 7/16″ OD, 0.045″ thk; split ring, Never Slip type.	Base plate, main bail bracket assembly, terminal block, capacitor and resistor bracket assembly.	4T2449
	SPRING: extension; 0.018″ music wire; 13/16″ lg x 15/64″ diam overall; approx 23 turns w/hook term indexed 90°.	Bell bracket assembly	4T2623
	WASHER, lock: spring steel; 0.200″ ID, 19/64″ OD, 0.047″ thk; split ring, Never Slip type.		4T2669
	WASHER, lock steel; 25/64″ ID, 41/64″ OD, 1/16″ thk.	Main bail bracket assembly	4T2920
	WASHER, flat: steel; 3/16″ ID, 7/16″ OD, 0.053″ thk.		4T3438

Ref. symbol	Name of part and description	Function of part	Signal Corps stock No.
	REPERFORATORS FPR5H193 AND FPR29GS235—Continued		
	NUT, hexagon: steel; ¼″–32; ⅜″ across flats; 0.094″ thk chamfered both sides.	Punch block bracket assembly	4T3595
	NUT, hexagon: steel; 5/32″–40; ¼″ across flats; 0.156″ thk chamfered both sides (this item used on the AN/TGC–1A only).	Punch block bracket assembly	4T3597
	NUT, hexagon: steel; #6–40 thd; 3/32″ thk; ¼″ across flats (this item used on the AN/TGC–1A only).		4T3598
	NUT, hexagon: steel; #4–40; 3/32″ thk; 3/16″ across flats.	Base plate, punch block bracket assembly, punch bail and vertical link assembly.	4T3599
	NUT, hexagon: steel; #6–40; 1/16″ thk; ¼″ across flats.	Punch bail and vertical link assembly, type bar basket assembly, ribbon feed mechanical assemblies.	4T3606
	SPRING: extension; 0.024″ diam music wire; 1″ lg x 0.223″ diam overall; special.	Type bar basket assembly, pull and function bar springs.	4T3610
	WASHER, lock: steel; #8, 11/64″ ID, 17/64″ OD, 1/32″ thk, split ring, Never Slip type.		4T3640
	WICK: oiling; 1.750″ lg x 0.093″ diam overall	Main shaft assembly	4T4809
	WICK: oiling; 0.250″ lg x 0.125″ OD	Main shaft assembly	4T4813
	WASHER, lock: spring type; spring steel; 21/64″ ID, 33/64″ OD, 0.045″ thk; split ring Never Slip type.	Ribbon feed mechanism	4T4814
	BEARING, ball: single row; self-alining: bore 0.5118″; 1.1811″ OD x 0.2756″ wd; Norma-Hoff #E–13, GE #3510881, Fafnir #13, Federal #FB–13, ND #13, SKF #E–13, Torrington #T–13.	110846 motor unit assembly	4T5061
	SPRING: compression; 0.027″ diam music wire; 7 turns; ⅝″ lg x ¼″ diam overall.	Ribbon feed mechanism	4T5363
	SCREW, machine: Fil H; steel; #2–56; ¼″ lg under head w/full length thd; head 0.068″ thk x 0.135″ diam.	Punch block assembly	4T5740
	CONTACT ASSEMBLY: governor; single tungsten cont ¼″ OD x 1/16″ thk; 129/32″ lg x ⅝″ h x ⅜″ thk overall; Teletype part/dwg #6314.	Center contact governor assembly.	4T6314
	CONTACT GOVERNOR: steel; #6–32; 0.385″ lg w/hex head ¼″ across flats; w/tungsten contact welded to head.	Adjustment screw	4T6320
	SPRING: extension; 0.033″ diam music wire; 13/16″ lg x 0.259″ diam overall; 19 turns open; w/machine hook term, indexed parallel.	Center contact governor assembly.	4T6323
	SCREW, machine: slotted hex head; steel; #6–32; 0.344″ lg under head w/full lg thd; head 0.187″ across flats x 0.094″ thk.	Center contact governor assembly.	4T6344
	NUT, hexagon: (see 6L3606–32–4.3)	Center contact governor assembly.	4T6345
	LEVER: selector sword; steel; sword-shaped w/2 arms and 1 pivot, 1¾″ lg x 1.074″ wd x 0.045″ thk overall.	Selector unit assembly	4T6685
	LEVER: selector T; steel; 0.594″ lg x 0.531″ wd x 0.051″ thk overall.	Selector unit assembly	4T6686
	PLATE, spacer: selector separator; 211/16″ lg x 2.141″ wd x 0.065″ thk approx overall.	Selector unit assembly	4T6689

Ref. symbol	Name of part and description	Function of part	Signal Corps stock No.
	REPERFORATORS FPR5H193 AND FPR29GS235—Continued		
	BAR, pull: steel; 4.578″ lg x 0.781″ h x 0.0455″ thk overall.	Pull or function bars	4T6692
	MOTOR, AC: series-wound; 1/25 hp, 1800 rpm; open frame; 5 1/2″ lg x 5 1/16″ wd x 4 15/16″ h overall; 110 v AC, 50/60 cyc, single ph, 1.5 amp.	Governed motor	4T6708
	ARMATURE ASSEMBLY, motor: 110 v, 50/60 cyc, 1/25 hp; 7 3/8″ lg x 2.355″ diam overall; 3/8″ diam shaft w/commutator.	For a-c series-governed motors	4T6710
	SCREW, machine: slotted hex head; steel; #10–32; 1/2″ lg under head; head 0.313″ across flats x 0.125″ thk.		4T6745
	SCREW, machine: slotted hex head; steel; #6–40; 5/16″ lg under head; head 1/4″ across flats x 3/32″ thk.		4T6746
	SCREW, shoulder: Fil H, chamfered; steel; #6–40; 0.843″ lg w/0.437″ lg thd; head 0.281″ diam x 0.094″ thk; shoulder 0.406″ lg x 0.187″ diam.	Base plate, range scale assembly	4T6799
	SCREW, shoulder: flat top Bind H; steel; #6–40; 3/8″ lg w/1/4″ lg thd; head 3/32″ thk x 9/32″ diam; shoulder 3/16″ diam x 1/8″ lg.	Main bail bracket assembly, ribbon feed mechanism, main shaft assembly.	4T6800
	SCREW, pilot: cheese head; steel; #4–40; 1 9/64″ lg w/1/16″ lg thd; head 3/16″ diam x 1/16″ thk; pilot 5/64″ diam x 1 3/64″ lg.	Bell bracket assembly. Range scale assembly.	4T6801
	SCREW, shoulder: flat top Bind H; steel; #6–40; 1 3/64″ lg w/7/64″lg thd; head 3/32″ thk x 0.280″ diam; shoulder 0.1865″ diam x 5/64″ lg.	Base plate. Ribbon feed mechanism.	4T6805
	SCREW, set: slotted, headless; steel; #6–40; 0.188″ lg w/full lg thd; rounded point.	Main bail bracket assembly. Ribbon feed mechanism.	4T6807
	SCREW, machine: slotted hex head; steel; #10–32; 3/8″ lg; head 5/16″ across flats x 1/8″ thk.	Base plate, bell bracket assembly. Main shaft assembly.	4T6810
	SCREW, machine: slotted hex head; steel; #6–40; 5/8″ lg under head; head 1/4″ across flats x 3/32″ thk.		4T6811
	LEVER: steel; 0.969″ lg x 0.125″ wd x 0.180″ h overall.	Trip latch lever for range finder	4T6830
	BAIL: steel; 3.063″ lg x 5/16″ wd x 0.531″ d overall; irregular shape, ends beveled at 35° angle.	Ribbon reverse	4T6834
	CRANK, bell: trip latch type; steel; 15/32″ lg x 13/32″ wd overall.	Range scale assembly	4T6850
	COLLAR, spacing: code bar; steel; 0.221″ diam x 0.051″ thk; double chamfered (this item used on the AN/TGC–1 only).	Punch bail and vertical link bracket, type bar basket.	4T6859
	WASHER, flat: felt, white; 1/4″ ID, 15/16″ OD, 1/16″ thk.	Main shaft assembly	4T6861
	LEVER: steel; 55/64″ lg x 25/64″ wd x 13/32″ d overall	Selector cam sleeve	4T6909
	LEVER: steel; 4 3/16″ lg x 25/32 wd overall	Code bar locking lever	4T6915
	BAR, pull: position #1 or #2; 0.045″ steel; 3.803″ from spring mtg/c to extreme end w/lower sect twisted 27°; 5.803″ lg x 1 3/16″ wd x 9/32″ thk overall.	Space or letters shift	4T6916
	BAR, pull: position #33; steel; 5.803″ lg x 1 3/16″ wd x 9/32″ thk overall.	Figures shift	4T6917
	SCREW, machine: eccentric; flat top Bind H; steel; #4–40; 0.281″ lg w/0.250″ lg thd; head 0.094″ thk x 0.312″ OD.	Bell bracket assembly	4T6942

Ref. symbol	Name of part and description	Function of part	Signal Corps stock No.
	REPERFORATORS FPR5H193 AND FPR29GS235—Continued		
	BUMPER: pallet backstop; leather; 6.375″ lg x 0.437″ wd x 0.125″ thk.	Type bar basket assembly	4T6954
	ECCENTRIC: adj stop; steel; 0.562″ lg x 0.250″ diam w/#4–40 thd shank 0.281″ lg, thd 3/16″ screwdriver adj.	Range scale assembly	4T6966
	LEVER: steel; 1.634″ lg x 0.578″ wd x 1.384″ h overall.	Clutch throw-out	4T6971
	WASHER, flat: brass; 9/64″ ID, 17/32″ OD, 0.0205″ thk.	Type bar basket assembly	4T6987
	LEVER: main bail; steel; 1.765″ lg x 0.375″ wd x 1/4″ thk overall.	Main shaft assembly	4T6989
	SCREW, pilot; hex head; steel; 1/4″–32; 0.594″ lg w/0.407″ lg thd; w/0.031″ lg x 0.209″ diam shoulder and pilot 0.156″ lg x 0.155″ diam; head 0.375″ across flats x 0.094″ h.	Main shaft assembly	4T6990
	SPRING: compression; 0.055″ diam music wire; 0.740″ lg x 0.890″ diam overall; special; 6½ turns w/closed ends.	Main shaft assembly	4T6993
	POST, supporting: link; screw steel; 9/32″ diam x 13/16″ lg.	Punch bail and vertical link bracket assembly.	4T6999
	WASHER, flat: steel; 9/64″ ID, 15/64″ OD, 0.055″ thk.	Selector unit assembly	4T7001
	WASHER, flat: steel; 9/64″ ID, 5/16″ OD, 0.032″ thk.		4T7002
	PLUNGER: pin type; steel; 0.455″ lg x 0.099″ diam overall; shank 0.077″ diam x 0.244″ lg.	Range scale assembly	4T7007
	GEAR: bevel; steel; 36 straight teeth; 48 pitch, 0.750″ PD; 0.770″ OD x 0.315″ thk, 0.1885″ bore; straight face.	Ribbon spool shaft	4T7042
	LINK, shaft: steel; J-shaped; 15/16″ lg x 13/32″ h x 3/16″ wd overall.	For ribbon reverse	4T7044
	GEAR: bevel; steel; 18 straight teeth; 48 pitch, 0.375″ PD; 0.412″ OD x 0.338″ thk, 0.126″ bore; straight face.	On ribbon feed shaft	4T7068
	STUD: steel; 23/64″ diam x 1⅜″ lg overall; one end #6–40 x 5/16″ lg thd; opposite end #6–40 x 7/32″ lg thd w/3/16″ diam shoulder 13/16″ lg.	Mounting stud for clutch lever	4T7386
	NUT, hexagon: steel; ½″–32; 0.125″ thk overall; 0.625″ across flats.		4T7415
	STUD: steel; 9/32″ diam x 25/32″ lg overall	Mounting stud for code bar	4T7484
	SPRING: compression; 0.026″ diam music wire; 15/32″ lg x 1/4″ diam overall; 6 turns w/squared ends.	Main bail bracket assembly	4T7599
	SPRING: compression; 0.012″ diam music wire; 13/64″ lg x 9/64″ diam overall; special; approx 7½ turns w/open ends.	Range scale assembly	4T7602
	SPRING: extension; 0.014″ diam music wire; 29/64″ lg x 5/32″ diam overall; special; approx 15 turns w/hook term, parallel.	Punch block bracket assembly. Range scale assembly.	4T7603
	BRACKET: w/main shaft caps; zinc alloy die casting; 5 11/32″ lg x 3⅜″ wd x 2⅞″ thk overall.	Main shaft assembly	4T7610
	SPRING: extension; 0.018″ diam music wire; 1 27/64″ lg x 13/64″ diam overall; special; approx 37 turns w/hook term, indexed 90°.	Selector unit assembly	4T7612

Ref. symbol	Name of part and description	Function of part	Signal Corps stock No.
	REPERFORATORS FPR5H193 AND FPR29GS235—Continued		
	SPRING: extension; 0.020″ diam music wire; 0.775″ lg x 0.133″ diam overall; special; approx 25 turns w/hook term, indexed 90°.	Selector unit assembly	4T7614
	SPRING: extension; 0.020″ diam music wire; 1″ lg x 7/32″ diam overall; special; approx 29 turns w/hook term, parallel.	Main shaft assembly	4T7615
	SPRING: extension; 0.014″ diam music wire; 1 5/32″ lg x 1 1/64″ diam overall; special; approx 55 turns w/hook term, indexed 90°.	Pull and function bar springs	4T7634
	SPRING: compression; 0.021″ diam music wire; 3 7/64″ lg x 3/16″ diam overall; 13 turns w/squared ends.	Main bail bracket assembly	4T7659
	WICK: oiling; hard felt, white; 0.375″ ID, 0.562″ OD, 0.125″ thk.	Main shaft assembly	4T7824
	SPRING: extension; 0.018″ diam music wire; 1.250″ lg x 0.217″ OD overall; special.	Type bar basket assembly. Pull and function bar springs.	4T7825
	RIBBON. (see 6M1175 and QM53–R–2880).		4T7835
	SPRING: extension; 0.014″ diam music wire; 0.645″ lg x 0.177″ OD overall; special.	Type bar basket assembly. Pull and function bar springs.	4T7965
	BRUSH, electrical contact: carbon; 2 3/16″ lg x 3/8″ OD overall; w/compression spring and end cap; GE #5052405AA7.	110846 motor unit assembly	4T8094
	LEVER: selector, right side; steel; 1.468″ lg x 1.271″ wd x 0.045″ thk overall.	Selector unit assembly	4T8157
	LEVER: selector, left side; steel; 1.641″ lg x 1.068″ h x 0.045″ thk overall.	Selector unit assembly	4T8158
	STUD: steel; 1 3/32″ lg x 9/32″ diam overall; #6–40 thd 1/8″ lg one end, #6–40 thd 1/4″ lg w/9/64″ diam shoulder 13/32″ lg other end.	Selector unit assembly	4T8470
	SCREW, machine: special; drill rod steel; round V-milled head; #2–56; 0.188″ lg w/0.188″ lg thd; shoulder 0.093″ sq w/one side rounded on 0.062″ rad w/max thk of 0.030″ located 0.010″ from head; head 0.130″ thk x 0.1875″ OD w/2 milled surfaces 27° on ea side of center line to depth on head of 0.100″.	For armature locking stud	4T8472
	LATCH, lever: clock spring steel; 1.188″ lg x 3/8″ wd x 9/64″ thk overall.	Ribbon feed	4T8493
	CAM ASSEMBLY: sleeve; steel; 29/32″ lg x 13/16″ OD x 1 7/32″ h overall; hole for shaft 0.2515″ ID; 5 cams stamped #75230.	Main keyboard shaft	4T8507
	ARMATURE, electromagnet: steel; selector; irregular shape, 2″ lg x 1 5/8″ wd x 15/16″ h approx overall.	Selector unit assembly	4T8508
	LEVER: tool steel; 1.948″ lg x 1 3/32″ wd x 0.050″ thk overall.	Locks magnet armature	4T8511
	SCREW, machine: slotted hex head; steel; #6–40; 1/2″ lg under head; head 1/4″ across flats x 0.094″ thk.	Ribbon feed mechanism. Selector unit assembly. Terminal block capacitor and resistor bracket assembly.	4T8539
	SCREW, machine: Bind H; steel; #6–40; 1/4″ lg under head; head 1/4″ diam x 0.062″ thk.	Punch block bracket assembly	4T8543
	SHIM: cont mtg; steel; 0.140″ ID, 5/16″ OD, 0.005″ thk.	Punch block bracket assembly. Punch bail and vertical link bracket assembly.	4T8896

Ref. symbol	Name of part and description	Function of part	Signal Corps stock No.
	REPERFORATORS FPR5H193 AND FPR29GS235—Continued		
	WASHER, flat: steel; 3/16" ID 11/32" OD, 0.036" thk.	Range scale assembly	4T34432
	ARM: steel; 2.189" lg x 0.656" wd x 1.380" d overall.	Ribbon reverse, left	4T70794
	ARM: steel; 2.189" lg x 0.656" wd x 1.380" d overall.	Ribbon reverse, right	4T70795
	SCREW, pivot: headless w/screwdriver slot; steel; #6–40; 0.307" lg x 0.137" diam overall; 7/32" lg thd; w/60° taper and 0.031" diam pivot point.	Selector unit assembly	4T70803
	CAP: contact brush; bakelite; 1/2" lg x 21/32" diam overall.	110846 motor unit assembly	4T70873
	NUT, hexagon: brass; #6–40; 5/16" thk overall; hex sect 0.375" across flats 0.031" thk.	Selector unit assembly	4T71045
	SCREW, adjustment: brass; hex; #6–40 thd; class 3 fit x 7/16" lg on ea end; 15/16" lg overall; hex center 1/32" thk x 3/8" across flats, shoulder 1/32" wd x 3/8" diam; special.	Selector unit assembly	4T71046
	SHIM: steel; 0.196" ID, 0.438" OD, 0.010" thk	Pull bar guide	4T71047
	WASHER, flat: steel; #2, 5/64" ID, 13/64" OD, 0.020" thk.	Selector unit assembly	4T71073
	GAGE: 0.010" diam music wire; steel hex handle 0.187" across flats; 3" lg overall.	Thickness gage	4T71559
	SCREW, machine: slotted hex head; steel #6–40; 3/4" lg under head w/3/8" lg thd; head 1/4" across flats x 0.094" thk.	Punch block bracket assembly	4T72508
	SPRING: compression; 0.068" diam music wire 33/64" lg x 3/4" diam overall; special; approx 4 turns w/open ends.	Main shaft assembly	4T72514
	NUT, hexagon: steel; 5/16"–32 LH thd; 0.281" thk overall; 1/2" across flats.	Main shaft assembly	4T72517
	WICK: oiling; 1/4" lg x 3/32" diam overall	Main shaft assembly	4T72521
	WICK: oiling; 3/8" lg x 3/32" diam	Main shaft assembly	4T72522
	GEAR: steel; driving gear; 0.750" diam x 0.125" thk overall; 16 teeth.	Clutch gear	4T72562
	WASHER, flat: felt; 1/2" ID, 11/16" OD, 1/16" thk		4T72563
	SHAFT: mtg gears, cams, couplings, and clutches; steel; 5.946" lg x 1/16" diam overall.	Main shaft with gear hub	4T72576
	WASHER, flat: steel; 5/16" ID, 9/16" OD, 0.035" thk.	Main shaft	4T72579
	SPRING: extension; 0.008" diam music wire; 0.425" lg x 0.200" OD overall; special.	Base plate	4T72595
	BEARING, ball: steel; 0.315" ID, 1.0236" OD, 0.315" thk; SKF #1–70153 spcl.	Main shaft	4T72644
	SCREW: hex head; steel; #2–56; 0.148" lg w/0.80" lg thd; tungsten point on head 0.250" OD x 0.020" thk; hex shoulder 0.250" across flats x 0.046" thk.	Adjustment screw	4T72835
	WASHER, flat: white felt; 0.516" ID, 1.250" OD, 0.062" thk.	Main shaft	4T72883
	DISK: friction driving; steel; 1/2" ID, 1 1/4" OD, 9/32" thk overall; 1/16" thk stock; bushing 39/64" OD x 3/32" wd w/2 integral key tabs extending from bushing on one side.	In clutch, main bail cam, friction driving.	4T72884

Ref. symbol	Name of part and description	Function of part	Signal Corps stock No.
	REPERFORATORS FPR5H193 AND FPR29GS235—Continued		
	SPRING: compression; 0.051″ diam music wire; 0.722″ OD x 7/8″ lg overall; special.	Main shaft assembly	4T72885
	GEAR: helical; worm gear type; steel; 35 spiral teeth; 1.664″ PO; 0.500″ bore; 0.500″ face; 1.755″ throat diam, 1.847″ OD.	110846 motor unit	4T73106
	WASHER, flat: felt, black; 5/8″ ID, 1 3/16″ OD, 3/16″ thk.	110846 motor unit	4T73232
	LEVER: steel; 0.868″ lg x 0.750″ wd x 0.625″ thk overall; 0.035″ thk stock.	Tape tension	4T73481
	SCREW, pilot: hex head; steel; #6–40; 25/32″ lg w/5/32″ lg thd; head 3/32″ thk x 1/4″ across flats; pilot 3/32″ diam x 9/16″ lg.	Punch bail and vertical link bracket assembly. Selector unit assembly.	4T74399
	GEAR: steel; 0.938″ OD x 0.781″ lg overall; 16 teeth.	Clutch driving gear	4T74502
	WASHER, flat: steel; 9/64″ ID, 5/16″ OD, 0.060″ thk.	Base plate, punch bail and vertical link assembly. Selector unit assembly.	4T74722
	SCREW, machine: slotted hex head; steel; #6–40 thd; 13/32″ lg; head 0.040″ thk x 1/4″ across flats (this item used on the AN/TGC–1A only).	Punch block bracket assembly	4T74986
	WICK: oiling; 5/8″ lg x 1/8″ diam	Main bail bracket assembly	4T75226
	WASHER, flat: steel; 9/64″ ID, 7/16″ OD, 0.037″ thk (this item used on the AN/TGC–1A only).	Tape reel container assembly	4T76099
	SCREW, machine: slotted hex head; steel; #6–40 thd; 15/16″ lg; thd portion 5/8″ lg; head 1/4″ across flats (this item used on the AN/TGC–1A only).	Motor-governor filter assembly	4T78028
	GUARD: pull bar; steel; 7.560″ lg x 7/16″ wd x 0.065″ thk overall (this item used on the AN/TGC–1A only).	Pull bar guard	4T98479
	CAM: steel; 1 7/16″ OD x 3 1/64″ thk overall; bore 1/2″ diam, face 3/16″ thk w/4 jaws 0.182″ wd x 5/32″ h (this item used on the AN/TGC–1A only).	Main bail	4T101436
	SPRING: compression; 0.055″ music wire; 6 1/2 turns; 2 9/32″ lg x 5 7/64″ diam overall (this item used on the AN/TGC–1A only).	Clutch spring in selector magnet support.	4T110878
	GEAR: helical; canvas base bakelite; 43 teeth; 28 pitch, 1.8262″ PD; 1.8976″ OD, 1/2″ bore, face 1/2″ thk; straight face (this item used on the AN/TGC–1A only).	Speed conversion gear	4T110882
	ARMATURE, electromagnet: steel and iron; irregular shape; 2 1/16″ lg x 1 5/8″ wd x 15/16″ thk overall (this item used on the AN/TGC–1A only).	In selector unit	4T204382
	SPRING: extension; 0.014″ diam music wire; 3 9/64″ lg x 1 11/64″ diam overall; approx 20 turns w/hook term, indexed 90°.	Ribbon feed mechanism	4T75229
	CAP: (see 4T70873)	Motor-governor filter assembly	4T77911
	ARM ASSEMBLY, contact: u/w inner disk; nickel silver or steel; 3 3/8″ x 7/16″ x 1 9/32″.	Governor brush and speed adjusting bracket.	4T78400
	BRUSH, electrical contact: carbon; governor; 15/64″ x 1/4″; Natl Carbon grade 9613.	Governor brush and speed adjusting bracket.	4T78403
	GEAR: worm; linen base bakelite; 31 spiral teeth; 19 pitch, 1.682″ PD; 1.877″ OD, 1/2″ bore, face 1/2″ thk; face edges beveled 25° (this item used on the AN/TGC–1 only).	86933 motor unit assembly	4T78509

Ref. symbol	Name of part and description	Function of part	Signal Corps stock No.
	REPERFORATORS FPR5H193 AND FPR29G9235—Continued		
	SPRING: extension; 0.0165″ diam music wire; 9/32″ lg x 1/8″ diam overall; approx 18 turns w/hook term, parallel.	Selector unit assembly	4T78824
	SCREW, machine: hex head; steel; #6–40; 23/64″ lg under head w/full length thd.	Ribbon feed mechanism, governor brush and speed adjust-bracket, terminal block, capacitor, and resistor bracket assembly.	4T80342
	BEARING, ball: single row, radial; felt seal, one side; 0.3937″ bore, 1.1811″ OD, 0.500″thk overall; ND type #8500LiA–P1, Holtzer #55512 (this item used on the AN/TGC–1 only).	86933 motor unit assembly	4T80358
	MOTOR, AC: sync; 1/40 hp, 1,800 rpm; open frame; 6 3/32″ lg x 5″ wd x 4 13/16″ h overall; 110 v AC, 60 cyc, single ph, 2.2 amp (this item used on the AN/TGC–1 only).	Synchronous motor (new style) Synchronous motor (old style).	4T82283
	SHIM: 0.004″ thk steel; 0.312″ OD x 0.160″ ID	In tape tension lever	4T82392
	SCREW, machine: slotted hex head; steel; #6–40; 7/16″ lg under head; head 1/4″ across flats x 3/32″ thk.	Main shaft assembly Motor-governor filter assembly.	4T82440
	WASHER, flat: steel; 9/64″ ID, 17/32″ OD, 0.094″ thk.	Selector unit assembly	4T82493
	COMMUTATOR: steel frame, bakelite insulation; 2 segment commutator 0.984″ OD x 1 1/32″ wd w/outer edge beveled; 2 7/8″ lg x 1 1/4″ wd x 2 7/32″ d overall (this item used on the AN/TGC–1 only).	Starting switch	4T82841
	SPRING: extension; 0.012″ diam music wire; 3 3/8″ lg x 1/8″ diam overall; 301 turns w/parallel ring ends (this item used on the AN/TGC–1 only).	86933 motor unit	4T82843
	PLATE: nickel silver; 2 5/8″ x 2 7/64″ x 0.0159″ thk overall.	Spacer in top selector plate	4T83920
	SPRING: torsion; 0.026″ diam music wire; 0.223″ diam x 0.558″ lg overall; special.	Punch block bracket assembly	4T84023
	WHEEL, detent: steel; 0.740″ OD x 0.189″ thk overall w/slot.	Operates detent lever	4T86920
	CORD: 2 #18 AWG stranded copper cond color-coded white w/black-white tracer; 31 3/8″ lg excl terminations; WECo #347A connector one end, spade term lugs other end.	Switchboard cord	4T89317
	STATOR, motor: teletype #82283; steel housing; sync winding, 1/40 hp, 110 v, 60 cyc, single ph; 5″ lg x 4 3/8″ wd x 5″ h overall (this item used on the AN/TGC–1 only).	For a-c motor	4T90263
	WASHER, flat: black felt; 3/16″ ID, 5/16″ OD, 1/16″ thk.	Main shaft assembly	4T90752
	WASHER, lock: steel; 3/16″ OD x 0.010″ thk; for #2 screw; internal teeth.	Selector unit assembly	4T90791
	SEGMENT, type bar: semi-steel; 6.094″ lg x 3.313″ wd x 1/2″ h overall.	Type bar basket assembly	4T91899
	SCREW, machine: FH; steel; #4–40; 0.312″ lg overall; head 0.216″ diam.	Punch block bracket assembly	4T93191
	LEVER: #1 left vert link; flat type; steel; 3.143″ lg x 0.315″ wd x 0.035″ thk overall.	Punch bail and vertical link bracket assembly.	4T95401

Ref. symbol	Name of part and description	Function of part	Signal Corps stock No.
	REPERFORATORS FPR5H193 AND FPR29GS235—Continued		
	LEVER: #2 vert link; flat type; steel; 3.072″ lg x 0.315″ wd x 0.035″ thk overall.	Punch bail and vertical link bracket assembly.	4T95402
	LEVER: #3 vert link; flat type; steel; 3.001″ lg x 0.315″ wd x 0.035″ thk overall.	Punch bail and vertical link bracket assembly.	4T95403
	LEVER: #4 vert link; flat type; steel; 2.930″ lg x 0.315″ wd x 0.035″ thk overall.	Punch bail and vertical link bracket assembly.	4T95404
	LEVER: #5 right vert link; flat type; steel; 2.859″ lg x 0.315″ wd x 0.035″ thk overall.	Punch bail and vertical link bracket assembly.	4T95405
	LEVER: shift lever; steel; 2.093″ lg x 0.810″ wd x 0.674″ thk overall, 0.065″ thk stock.	Base plate	4T95409
	CRANK, bell: #1 left intermediate bell crank; steel; L-shaped, 1.016″ lg x 0.832″ wd x 0.035″ thk overall.	Punch bail and vertical link bracket assembly.	4T95411
	CRANK, bell: #2 intermediate bell crank; steel; L-shaped, 1.050″ lg x 0.932″ lg x 0.035″ thk overall.	Punch bail and vertical link bracket assembly.	4T95412
	CRANK, bell: #3 intermediate bell crank; steel; L-shaped; 1.145″ lg x 1.132″ lg x 0.035″ thk overall.	Punch bail and vertical link bracket assembly.	4T95413
	CRANK, bell: #4 intermediate bell crank; steel; L-shaped; 1.160″ lg x 1.232″ lg x 0.035″ thk overall.	Punch bail and vertical link bracket assembly.	4T95414
	CRANK, bell: #5 right intermediate bell crank; steel; L-shaped; 1.171″ lg x 1.332″ lg x 0.035″ thk overall.	Punch bail and vertical link bracket assembly.	4T95415
	BUSHING: bearing; steel; 0.113″ ID, 0.172″ OD, 0.042″ lg; outside surface ground and polished; inside edges beveled; headless.	Punch bail and vertical link bracket assembly.	4T95416
	CRANK, bell: #1 rear punch bell crank; steel; L-shaped; 1 3/16″ lg x 1 3/4″ lg x 0.035″ thk overall.	Punch bail and vertical link bracket assembly.	4T95421
	CRANK, bell: #2 punch bell crank; steel; L-shaped; 1 3/16″ lg x 1 1/8″ lg x 0.035″ thk overall.	Punch bail and vertical link bracket assembly.	4T95422
	CRANK, bell: #3 punch bell crank; steel; L-shaped; 1 3/16″ lg x 1 15/64″ lg x 0.035″ thk overall.	Punch bail and vertical link bracket assembly.	4T95423
	CRANK, bell: #4 punch bell crank; steel; L-shaped; 1 3/16″ lg x 1 3/32″ lg x 0.035″ thk overall.	Punch bail and vertical link bracket assembly.	4T95424
	CRANK, bell: #5 front punch bell crank; steel; L-shaped; 1 3/16″ lg x 1 23/64″ lg x 0.035″ thk overall.	Punch bail and vertical link bracket assembly.	4T95425
	SPRING: extension; 0.010″ diam music wire; 0.120″ diam x 0.938″ lg overall; special.	Punch bail and vertical link bracket assembly.	4T95428
	SPRING: compression; 0.017″ diam music wire; 15/64″ diam x 15/16″ lg overall; 14 turns w/open ends, not ground.	Base plate	4T95430
	CRANK, bell: steel; V-shaped; 1.344″ lg x 1.447″ lg x 0.045″ thk overall.	#1 top code bar	4T95431
	CRANK, bell: steel; V-shaped; 1.344″ lg x 1.369″ lg x 0.045″ thk overall.	#2 code bar bell crank	4T95432
	CRANK, bell: steel; V-shaped; 1.344″ lg x 1.291″ lg x 0.045″ thk overall.	#3 code bar bell crank	4T95433
	CRANK, bell: steel; V-shaped; 1.344″ lg x 1.213″ lg x 0.045″ thk overall.	#4 code bar bell crank	4T95434
	CRANK, bell: steel; V-shaped; 1.344″ lg x 1.135″ lg x 0.045″ thk overall.	#5 bottom code bar bell crank	4T95435

Ref. symbol	Name of part and description	Function of part	Signal Corps stock No.
	REPERFORATORS FPR5H193 AND FPR29GS235—Continued		
	PLATE, spacer: nickel silver; 1.312″ lg x 0.884″ wd x 0.0201″ thk overall.	Code bar bell crank separator	4T95436
	NUT, shoulder: steel; #6–40; ⅛″ thk; 0.185″ across flats.	Punch bail and vertical link bracket assembly.	4T95438
	SCREW, pilot: slotted, headless; steel; ¼″–32; ⅞″ lg w/ 1 1/16″ lg thd; pilot 0.139″ OD x ⅛″ lg.	Punch block bracket assembly	4T95443
	PAWL, ratchet: steel; 1.467″ lg x 0.421″ wd x 0.095″ thk overall.	Tape feed pawl	4T95446
	ECCENTRIC: hex type; steel; 0.312″ across flats x 0.140″ lg overall.	Tape feed pawl	4T95447
	GUIDE, ribbon: 0.062″ diam Bessemer rod; M-shaped; 1½″ lg x 0.865″ wd x 0.218″ thk overall.	Punch block bracket assembly	4T95449
	BLOCK ASSEMBLY, punch: (see 4T111023)		4T95451
	STRIPPER: steel; 0.094″ diam x 0.328″ lg overall.	Punch, tape code	4T95454
	STRIPPER: steel; 0.094″ diam x 0.328″ lg overall.	Punch, tape feed	4T95455
	SPRING: compression; 0.010″ diam music wire; 0.293″ lg x 0.085″ diam overall; 9 turns w/end ground flat.	In punch block assembly	4T95456
	BRACKET: steel; 1.187″ lg x 0.390″ wd x 0.285″ thk overall.	Spring retainer bracket	4T95457
	STUD: steel; ⅝″ lg overall; #6–40 thd; thd 0.172″ lg.	Punch bail and vertical link bracket assembly.	4T95459
	ARM: steel, irregular shape; 2.171″ lg x 0.869″ wd x 1.455″ d overall.	Ribbon reverse	4T95467
	SCREW, pilot: slotted, headless; steel; ¼″–32; 0.875″ lg w/0.562″ lg thd; pilot 0.313″ lg x 0.155″ diam w/end chamfered 0.015″.	Punch bail and vertical link bracket assembly.	4T95487
	BEARING, sleeve: steel; male; 0.139″ ID, 0.312″ OD, 0.130″ lg overall w/head 0.187″ diam x 0.100″ lg.	Punch bail and vertical link bracket assembly.	4T95490
	BEARING, sleeve: steel; male; 0.139″ ID, 0.312″ OD, 0.181″ lg overall w/head 0.187″ diam x 0.140″ lg.	Punch bail and vertical link bracket assembly.	4T95492
	ROLLER, cam: screw steel; 0.189″ ID, 0.875″ diam x 0.214″ thk.	For punch arm cam	4T95493
	SPRING: extension; 0.045″ diam music wire; 0.350″ OD x 1.240″ lg overall.	Punch bail and vertical link bracket assembly.	4T95496
	SCREW: upstop, punch bail; steel; 0.844″ lg overall; #6–40 thd; 5/16″ lg under head; hex head 0.094″ thk x 3/16″ across flats.	Adjustment	4T95499
	SCREW, machine: FH; steel; #4–40; ½″ lg overall; thd portion 13/32″ lg.	Punch block bracket assembly	4T95971
	SHIM: steel; 19/32″ ID, 13/16″ OD, 0.012″ thk	For main shaft	4T96763
	SHIM: steel; 19/32″ ID, 13/16″ OD, 0.016″ thk	For main shaft	4T96764
	SHIM: steel; 19/32″ ID, 13/16″ OD, 0.020″ thk	For main shaft	4T96765
	BUSHING, threaded: head type; steel; ¼″–32 thd x 0.313″ lg x 0.126″ ID; hex head 0.062″ thk x 0.312″ across flats.	Punch block bracket assembly	4T96837
	SPRING: flat; steel; ⅞″ lg x ¼″ wd x ⅜″ h overall.	For tape guide	4T96846
	FELT: oiling; 13/32″ lg x 1″ wd x ⅛″ thk	Main bail bracket assembly	4T98150

Ref. symbol	Name of part and description	Function of part	Signal Corps stock No.
	REPERFORATORS FPR5H193 AND FPR29GS235—Continued		
	SUPPRESSOR, electrical noise: consists of 5 capacitors and 1 brass core retard coil; 4 15/16" lg x 1½" wd x 2⅞" h overall; 110 V AC, 1.6 amp.	To suppress electrical noise	4T99250
	CABLE ASSEMBLY: 2 #18 AWG stranded copper cond, type SJ; 32" lg excl terminations; Hubbell #7057 connector one end, ring type term lug other end.	Power cable assembly	4T99968
	SPRING: extension; 0.063" diam music wire; 0.426" OD x 2¾" lg overall.	Main shaft assembly	4T101083
	LEVER: steel; 4.187" lg x 0.781" wd overall	Code bar locking	4T103310
	CABLE ASSEMBLY: 2 #18 AWG stranded copper cond; 45¼" lg excl terminations; Hubbell #9202 connector one end, ring type term lug other end.	Power cable assembly	4T110768
	WORM, gear: steel; 14 teeth; 28 pitch, 0.9238" PD, 3.0714 to 1 ratio; 1.500" lg overall, gear 0.750" lg x 0.9952" OD, shank 0.750" lg x 0.688" diam, 0.312" diam bore x 0.063" d (this item used in the AN/TGC–1A only).	For speeding up operation	4T110881
	BLOCK ASSEMBLY, punch: 5 unit, straight feed; c/o 6 punches and 6 strippers; steel; 1 3/16" h x ¾" wd x 1 17/32" d overall.		4T111023
	RETAINER, disk: steel; 1.250" diam x 0.280" thk overall, polished friction surface 1.250" diam w/shank 0.606" diam x 0.093" wd, two 0.125" lg x 0.120" wd prongs on shank (this item used in the AN/TGC–1A only).	Friction disk	4T111686
	BRACKET: L-shaped; steel; 4.187" lg x 2.478" wd x 0.065" thk overall (this item used in the AN/TGC–1A only).	For selector unit	4T204372
	BRACKET: cast-iron; 1.531" lg x 1.125" wd x 0.281" thk overall (this item used in the AN/TGC–1A only).	Armature bracket	4T204384
	BRACKET: L-shaped; steel; 1.125" lg x 0.765" wd x 0.065" thk overall (this item used in the AN/TGC–1A only).	Selector spring mounting	4T204644
	ARM: steel; 1.500" lg x 0.260" wd tapered to 0.094" wd w/0.078" rad ball on tapered end (this item used in the AN/TGC–1A only).	Selector spring extension	4T204645
	MODIFICATION KIT MX–763/FG: for Teletype model #FPR5H typing reperforator (this item used in the AN/TGC–1 only).	To convert typing reperforator from 60 to 100 words per minute.	4T205064
	BAR, type: w/pallet; steel; 3.440" lg x 0.703" wd over-all, as follows:		
	BAR, type: (X 1); stamped 2	Type bar (with pallet)	4T98968
	BAR, type: (Q 1); stamped 3	Type bar (with pallet)	4T98969
	BAR, type: (V ;); stamped 4	Type bar (with pallet)	4T98971
	BAR, type: (G &); stamped 5	Type bar (with pallet)	4T98974
	BAR, type: (W 2); stamped 6	Type bar (with pallet)	4T98975
	BAR, type: (F !); stamped 7 (this item used in the AN/TGC–1A only).	Type bar (with pallet)	4T98977
	BAR, type: (F !); stamped 7 (this item used in the AN/TGC–1 only).	Type bar (with pallet)	4T98979
	BAR, type: (C :); stamped 8	Type bar (with pallet)	4T98981
	BAR, type: (D $); stamped 9	Type bar (with pallet)	4T98984

Ref. symbol	Name of part and description	Function of part	Signal Corps stock No.
	REPERFORATORS FPR5H193 AND FPR29GS235—Continued		
	BAR, type: (R 4); stamped 10	Type bar (with pallet)	4T98985
	BAR, type: (J '); stamped 11 (this item used in the AN/TGC–1A only).	Type bar (with pallet)	4T98987
	BAR, type: (A –)1; stamped 12	Type bar (with pallet)	4T98991
	BAR, type: (T 5); stamped 13	Type bar (with pallet)	4T98992
	BAR, type: (E 3); stamped 14	Type bar (with pallet)	4T98993
	BAR, type: (N ,); stamped 15 (this item used in the AN/TGC-1A only).	Type bar (with pallet)	4T98995
	BAR, type: (N '); stamped 15 (this item used in the AN/TGC–1A only).	Type bar (with pallet)	4T98997
	BAR, type: (I 8); stamped 16	Type bar (with pallet)	4T98998
	BAR, type: (O 9); stamped 17	Type bar (with pallet)	4T98999
	BAR, type: (H £); stamped 18	Type bar (with pallet)	4T99001
	BAR, type: (L)); stamped 19	Type bar (with pallet)	4T99004
	BAR, type: (U 7); stamped 20	Type bar (with pallet)	4T99006
	BAR, type: (M .); stamped 21 (this item used in the AN/TGC–1A only).	Type bar (with pallet)	4T99007
	BAR, type: (M %); stamped 21 (this item used in the AN/TGC–1 only).	Type bar (with pallet)	4T99008
	BAR, type: (Y 6); stamped 22	Type bar (with pallet)	4T99010
	BAR, type: (P 0); stamped 23 (this item used in the AN/TGC–1 only).	Type bar (with pallet)	4T99011
	BAR, type: (B ?); stamped 24	Type bar (with pallet)	4T99013
	BAR, type: (K (); stamped 25	Type bar (with pallet)	4T99016
	BAR, type: (Z "); stamped 26	Type bar (with pallet)	4T99019
	BAR, type: (. ,); stamped 27	Type bar (with pallet)	4T99022
	BAR, type: (= #); stamped 28 (this item used in the AN/TGC–1 only).	Type bar (with pallet)	4T99025
	BAR, type: (J); stamped 11 (this item used in the AN/TGC–1 only).	Type bar (with pallet)	4T99027
	BAR, type: (S); stamped #1	Type bar (with pallet)	4T99028
	BAR, type: (≪); stamped 27 (this item used in the AN/TGC–1A only).	Type bar (with pallet)	4T99032
	BAR, type: (≡ ≡); stamped 28 (this item used in the AN/TGC–1A only).	Type bar (with pallet)	4T99033
	BAR, type: (P Ø); stamped 23 (this item used in the AN/TGC–1A only).	Type bar (with pallet)	4T104951
	RESISTOR, fixed: WW; 550 ohms ±10%; 90 w; tapped at 300 ohms; 250 ohms sect 75 w, 300 ohms sect 15 w; 5" lg x 1⅛" diam; 3 solder lug term.	Terminal block, capacitor and resistor block assembly.	4T106049
	NUT, hexagon: steel; #6–32; 3/32" thk; ¼" across flats; special.		6L3606–32–4.3
	WASHER, lock: spring steel; #6; 9/64" ID, 15/64" OD, 0.031" thk; split Never Slip type.		6L73006
	RIBBON: black, medium inked; ½" wd x 12 yds lg; Fed Spec #DDD–R–311, type A, class 1.	Typewriter ribbon	6M1175 QM53–R–2880
	SIGNAL INDICATOR		
	CONTROL: signal indicator: c/o alarm lamps and push-button control switches; 21" wd x 1¾" h x 4¼" d; Western Union dwg #108233–3.	Alarm control	4T1000–1/C4
S1S	CONNECTOR, plug: female; 27 flat cont blades; straight; 2 15/16" lg x 1 13/16" wd x 1⅜" d overall; Jones HB #S–327–CCT.	Signal indicator panel connector	2Z8697.1

Ref. symbol	Name of part and description	Function of part	Signal Corps stock No.
	SIGNAL INDICATOR—Continued		
B–1, B–2	LAMP LM–41: incandescent; 120 v, 6 w; bulb S–6; clear; 1⅞″ lg overall; candelabra screw base; Mazda #6S6.	Signal lamps	2Z5941
B–1	LIGHT, indicator: white disk, 1″ jewel; miniature candelabra screw base; 2 1/16″ lg x 1⅜″ diam overall: Drake #75.	Jewel for white lamp	2Z5884–50
B–2	LIGHT, indicator: red disk, 1″ jewel; miniature candelabra screw base; 2 1/16″ lg x 1⅜″ diam overall; Drake #75.	Jewel for red lamp	2Z5884–9
F	SWITCH, push: DPDT; 25 amp, 250 v; 1½″ lg x ½″ wd x ¾″ h; nonlocking; Mallory type #2006.	Release key	3Z9824–27
D–1, D–2	SWITCH, push: DPST; 1 1/16″ lg x ¾″ wd x 2⅛″ h; nonlocking, 2 pole normally closed; Mallory type #2005.	Number release and break key	3Z9824–27.5
E	SWITCH, push: DPDT; 25 amp, 250 v; 2 7/16″ lg x ¾″ wd x 1 1/16″ h; locking type; Mallory type #2006–L.	Alarm off	3Z9824–27.8
C–1, C–2	SWITCH, push: DPST; 2 1/16″ lg x ¾″ wd x 1 1/16″ h; nonlocking; Mallory type #2004.	Tape feed-out keys	3ZK9824–44
	TAPE WINDER		
	WINDER, tape: consists of AC-DC motor, reel and reduction gear; approx 12½″ lg x 6″ wd x 12″ h overall; Western Union part #1039–A, dwg #K–10208, Bunnell #109905.	Winds tape	4T1000–1/C2
I–304–7	BEARING, sleeve: bronze; 0.250″ ID, 0.377″ OD, ⅜″ lg overall; Oilite #A–304–7.	Bearing for drive shaft	4A35
FI–300	BEARING, sleeve: bronze; 0.252″ ID, 0.3775″ OD, 1 1/32″ lg overall w/flange 15/32″ diam x 3/64″ thk; Oilite #FI–300.	Bearing for drive shaft	4A35–1
C–3516	BEARING, sleeve: bronze; 0.376″ ID, 0.627″ OD, ¼″ lg overall w/flange ⅜″ diam x 1/16″ thk; Oilite #FI–503.	Bearing for drive shaft	4A35–2
FI–503	BEARING, sleeve: bronze; 0.376″ ID, 0.564″ OD, ¾″ lg overall w/flange 0.740″ diam x 1/16″ thk; Oilite #FI–503.	Bearing for reel shaft	4A35–3
#2–50	BOARD, terminal: 2 screw term; spaced on ½″ ctr; bakelite; 1 61/64″ lg x ⅞″ wd x ⅛″ thk; Jones HB #2–50.	Connector between motor and switch.	2Z9463.1
C–3530	BRACKET: U-shaped; steel; 1 5/16″ lg x 0.936″ wd x 1″ h overall; Western Union dwg #A–10186.	Light support	4TP10186
3661	BUSHING: spacer; brass; 11/64″ ID, ¼″ OD, 1″ lg; Amer Rad Hdwe #3661.	Support for terminal board	2Z1409–78
C–3500	CAP: bearing; aluminum; 2½″ diam 0.328″ thk; 3 mtg ears, ea w/0.149″ diam hole; Western Union dwg #10155.	Support for main shaft bearing	4TP10155
2364	CLAMP: cable; steel; ¾″ lg x ⅜″ wd x ¼″ h overall; for ¼″ diam cable; Amer Rad Hdwe #2364.	Clamp for light cable	2Z2636–34
SC–37	COLLAR, locking: steel; ⅜″ ID, ¾″ OD, ⅜″ thk overall; Boston Gear #SC37.	Positions driven-gear shaft	4A420

Ref. symbol	Name of part and description	Function of part	Signal Corps stock No.
	TAPE WINDER—Continued		
C–3513	COLLAR, shaft: steel; 0.376″ ID, 0.875″ OD, ⅜″ thk overall; milled flat on outer surface w/0.144″ diam hole for securing to shaft; Western Union dwg #A–10168.	Holds driving gear in place on clutch shaft subassembly.	4TP10168
HE	CONNECTOR, plug: male; 2 cont; straight; 1¼″ lg x 1 1/16″ diam excl cont; Hubbell #7057.	Power plug	6Z1727
CCO	COUPLING, flexible: cushion type; steel; 1 1/16″ lg x 1 1/16″ diam overall; w/1 end 5/16″ bore. other end ¼″ bore, ¼″-20 x ¼″ lg setscrew ea end; Flexible Coupling Co type #1, Bunnell #109911.	Connects motor to drive shaft	4A442
C–3510	DISK: steel; 1¼″ diam x 11/32″ thk overall w/1 side extended 0.031″ x ½″ diam to accommodate friction washer; opposite side extends 0.2503″ x ¾″ diam; Western Union dwg #A–10165.	Clutch disk	4TP10165
C–3362	FLANGE, mounting: steel; 0.173″ ID, 0.875″ OD, 0.093″ thk overall w/extension 0.609″ diam x 0.015″ thk; Western Union dwg #9980.	For mounting snubber roller	4A475
H2448R	GEAR: spur; steel; helical; RH; 48 teeth; 33.94 pitch, 24 PD; 2″ OD, ⅝″ bore, ¼″ thk; straight face; Boston Gear #2448R.	Driving gear	4A700
C–3515	GEAR: spur; steel; helical; 48 teeth; 33.94 pitch, 24 PD; 2″ OD, 3/16″ bore, ¼″ thk; straight face; Boston Gear #H2448R modified per Bunnell dwg #109913.	Driven gear	4T109913
	GEAR: spur; steel; straight; 64 teeth; 48 pitch, 1 1/16″ PD; 1⅜″ OD, ¼″ bore, ¼″ thk w/2″ lg x ⅓″ diam shaft force-fitted to gear; straight face; Bar Col gear #PYAZ–508, Bar Col shaft #PYAZ–16–1; Bunnell #113035.	Part of reduction gear train	4T113035
	GEAR: spur; steel; straight; 14 teeth; 64 pitch, ¼″ PD; 9/32″ OD x ¼″ thk, ⅛″ bore; straight face; Bar Col #PYAZ–201; Bunnell #113043.	On motor unit drive shaft, part of reduction gear train.	4T113043
C–3497	GEAR ASSEMBLY: c/o gear and gear hub and necessary hdwe; steel; ⅝″ ID, 2 1/16″ OD, ¾″ wd overall; Western Union dwg #10152.	In reel shaft drive	4TP10152
C–3498	GEAR ASSEMBLY: drive; c/o steel gear and bronze bearing; 0.376″ ID, 2 1/16″ OD, 0.312″ thk overall; Western Union dwg #10153.	Driving gear and hub	4TP10153
	GEAR ASSEMBLY: c/o steel shaft 1 7/16″ lg x 5/32″ diam, Bar Col #PYAZ–20; steel, 72 teeth, 64 pitch, 1 3/32″ PD; 1⅛″ OD x ⅛″ thk, Bar Col #PYAZ–458: steel pinion gear 32 teeth, 48 pitch, 2 1/32″ PD; 1 1/16″ OD x 5/16″ thk w/hub ⅛″ thk, Bar Col #PYAZ–316–1; Bunnell #113038.	Spur gear	4T113038
	GEAR ASSEMBLY: c/o steel shaft 1 7/16″ lg x 5/32″ diam Bar Col #PYAZ–20; steel, 75 teeth, 64 pitch, 1 5/32″ PD; 1 3/16″ OD x ⅛″ thk, Bar Col #PYAZ–461; steel pinion gear 18 teeth, 64 pitch, ¼″ PD; 9/32″ OD x ⅜″ thk w/hub ⅛″ thk, Bar Col #PYAZ–22–3; Bunnell #113037.	Spur gear	4T113037

Ref. symbol	Name of part and description	Function of part	Signal Corps stock No.
	TAPE WINDER—Continued		
	GEAR ASSEMBLY: c/o steel shaft 1 7/16" lg x 5/32" diam, Bar Col #PYAZ–20; linen phenolic, 56 teeth, 64 pitch, 7/8" PD; 2 9/32" OD x 5/32" thk, Bar Col #PYAZ–414; steel pinion gear 15 teeth, 64 pitch, 1/4" PD; 9/32" OD x 3/16" thk w/hub 5/32" thk, Bar Col #PYAZ–220; Bunnell #113036.	Spur gear	4T113036
C–3514	HUB: gear; steel; 5/8" ID, 1 5/16" OD, 5/8" thk overall; Western Union dwg #A–10169.	Support for spur gear	4TP10169
5381	INSULATOR, bushing: round; bakelite; 3/8" ID x 5/16" lg overall, head 3/4" diam x 1/16" thk; OD thd portion 5/8"–18 thd 1/4" lg; Hubbell #5381.	Socket bushing	3G131–24
194120	LAMP, incandescent: 120 v, 15 w; bulb T–7 frosted; 2 5/8" lg overall; bayonet candelabra base; Mazda #15T7DC.	Cabinet lamp	6Z6820–2.2
193296	LAMPHOLDER: double cont bayonet candelabra base; bakelite body; 120 v, 6 amp; 6 1/2" lg x 1 1/2" diam overall; toggle switch; two 18" wire leads; Diehl #48694.	For cabinet lamp	6Z8335–1
FUE51	MOTOR, AC: shaded pole ind type; 0.008 hp at 20 rpm; closed frame; 115 v, 60 cyc, single ph, 0.16 amp; 3 5/8" lg x 4 1/4" wd x 3 3/4" h overall; Bar Col #PYAZ–4433–1.	Drive tape winder	3H3000–136
	PLATE, retainer: steel, cadmium pl; pear shape; outside dimen 2 1/4" lg x 1 5/8" wd, inside dimen 1 3/8" lg x 7/8" wd, 1/32" thk; Bar Col #PYAZ–10–1; Bunnell #113047.	Holds felt oil seal	4T113047
C–3494	REEL ASSEMBLY: c/o shaft, nut, hub, core, 2 flanges, and necessary hdwe; aluminum and brass; 9 7/8" x 2" OD thk overall; Western Union dwg #10149.	Tape reel assembly	4A1985–1
6–3506	ROLLER, sleeve: steel; 0.626" ID, 3/4" OD, 1" lg: Western Union dwg #A10161.	Snubber for tape	4TP10161
	SEAL, oil: pear shape; outside dimen 2 3/16" lg x 1 3/4" wd, inside dimen 1" lg x 7/8 wd, 1/8" thk; Bar Col #PYAZ–9; Bunnell #113046.	For motor reduction gear assembly.	4T113046
C–3509	SHAFT: drive; steel; 4 11/16" lg x 3/8" diam overall; Western Union dwg #A–10164.	In tape winder mechanism	4TP10164
C–3495	SHAFT ASSEMBLY: c/o lever, shaft, pin, 2 springs, and 2 steel balls; SS; 6 1/4" lg x 3/8" diam overall; Western Union #A–10150.	In tape reel assembly	4A2298A.1
C–3496	SHAFT ASSEMBLY: c/o shaft, disk, washer spring, collar, and necessary hdwe; steel; 4 11/16" lg x 2" diam overall; Western Union dwg #10151.	Clutch	4TP10151
C–3512	SPRING: compression; 0.095" diam music wire: 7 turns; 1 1/4" lg x 0.971" diam; Western Union part/dwg #10167–2.	Holds pressure against clutch	4TP10167
IF–24	SUPPRESSOR: capacitor type; 50,000 mmf; 2" lg x 7/8" diam; 110 v ac-dc; 2 flexible wire leads 8" lg; Dubilier "Quietone" #IF–24.	Suppresses electrical noise	3Z1891–56.1
20992	SWITCH, toggle: SPST: 3 amp, 250 v; bakelite, body: 1 3/16" lg x 1/2" wd x 1/2" d overall; AH&H #20992.	Turns tape winder on or off	3Z9692

823667—49——14

Ref. symbol	Name of part and description	Function of part	Signal Corps stock No.
	TAPE WINDER—Continued		
	WASHER, thrust: steel; ¼″ ID, ½″ OD, 1/16″ thk; Boston Gear per Bunnell dwg #109918.	In clutch	6L75050–1
	WINDING, motor field: c/o rotor, stator assembly, 1780-turn coil winding #YAB–456–1: lamination assembly c/o 15 right #YAB–73–1, 15 left #YAB–74–1, one #YAB–77–1, 2 oil tubes #PYAZ–188, shaft 2¼″ lg x ⅛″ diam, #YAB-838, two stranded copper wire leads 16″ lg for power connection; 115 v, 60 cyc, 0.16 amp, single ph; 2¾″ wd x 2½″ h x 2¼″ d overall; Bunnell #113045.	For a-c motor	4T113045

INDEX

	Paragraph	Page
A and B transmitting relays:		
Functioning	101	84
Trouble analysis	145	114
Abbreviations, list	app. 1, 9	142
Adjusting and cleaning:		
Control relays RA, RB, RR1, RR2, RC, RN, RNN, RBK1, RBK2	158	119
255A type relays	156	118
Adjustments and requirements. (*See* Requirements and adjustments.)		
Alarm lamp (white)	109*b*	94
Circuit	106	93
Trouble analysis	139*b*	111
ALARM OFF (Button Out) switch	109*c*	94
Circuit	106	93
Trouble analysis	139*b*	111
Application:		
Five-unit start-stop teletypewriter code	15	17
General functioning of equipment	14	15
Normal operation:		
Duplex make-and-break (neutral)	7	7
Duplex polar	8	9
Single	9	9
Split operation:		
Duplex make-and-break (neutral)	10	9
Duplex polar	11	9
Single	12	15
Synchronism	16	17
System	6	7
Typical comcenter lay-out	13	15
Armature spring tension	173	127
Assembly, installation, and disassembly:		
Assembly	20	23
Disassembly and repacking	23	28
Installation of Teletypewriter Sets AN/TGC–1 and AN/TGC–1A	22	23
Location of equipment	17	18
Physical checks	21	23
Unpacking shipping containers:		
Domestic	19	23
Oversea	18	18
Auxiliary and test equipment, technical manuals	app. 1, 2	141
B and A transmitting relays. (*See* A and B transmitting relays.)		
Break:		
Circuit, relays RBK1 and RBK2	107	94
Trouble anslysis	145	114
Feature:		
Circuit	107	94
Normal single operation	46*d*; 46*e*	38, 39
Split single operation:		
Circuit No. 1	49*d*; 54*c*; 102*b*	39, 41, 86
Circuit No. 2	52*d*; 102*b*	40, 86
Key	46*e*; 54*c*; 109*g*	39, 41, 96
Functioning	102	86
Trouble analysis	139*c*	111
Lamp (red)	33*c*; 109*f*; 109*g*	34, 96
Circuits	104*b*; 107*b*	88, 94
Trouble analysis	139*d*	111
Signal, action upon receiving	46*d*	38

	Paragraph	Page
Cabinet, power. (*See* Power cabinet.)		
Call-in circuit	106	93
Camouflage	app. 1, 6	141
Capacitors and resistors, preventive maintenance	74	56
Check list, preventive maintenance	80; 81	58
Checks:		
Performance. (*See* Routine checks of performance.)		
Physical	21	23
Checking and adjusting motor speed	38	35
Circuits	96–107	78
Send-receive loops	25*b*	30
Unconnected, switch settings for	43*c*	37
Cleaning and adjusting. (*See* Adjusting and cleaning.)		
Clutch:		
Magnets	115*f*	98
Requirements and adjustments	171	127
Spring compression	170	127
Throw-out lever, trouble analysis	144*c*	113
Code, five-unit start-stop teletypewriter	15	17
Comb-shaft retainers, requirements and adjustments	176	128
Concenter, typical lay-out	13	15
Compartments, tape	3*i*	5
Completion of transmission cycle	100	83
Components, table of	2	2
Connections	14*b*; 14*d*; 17*b*; 24*c*	17, 18, 29
Ground and power supply	24	29
Line	25	30
Normal operation:		
Duplex make-and-break	27	32
Duplex polar	26	30
Single	28	32
Split operation:		
Duplex make-and-break	30	33
Duplex polar	29	33
Single	31	33
To other equipment	32	33
Console:		
Assembly	20*a*; 20*b*	23
Shelf:		
Lubrication chart	88*c*	65
Preparation for lubrication	85*e*	61
Contacts NC	98	80
Control relays RA, RB, RR1, RR2, RC, RN, RNN, RBK1, RBK2. (*See* relays.)		
Converting Teletypewriter Set AN/TCG–1 to Teletypewriter Set AN/TCG–1A	159	120
Cords, cables, and plugs, preventive maintenance	68	54
Decontamination	app. 1, 4	141
Demolition	app. 1, 5	141
Department of the Army Signal Supply Catalog pamphlets	1, app. II, 1	144
Description:		
General	1	1
Multiple transmitter distributor	114	96
Base (MXB8)	117	101
Packaging data for shipment:		
Domestic	5	7
Export	4	6
Table of components	2	2
Teletypewriter Sets AN/TGC–1 and AN/TGC–1A	3	2
Differences in models	1*b*; 159	1, 120
Disassembly of Teletypewriter Sets AN/TGC–1	23	28
Distortion Test Set TS–383/GG	130	106
Distributor-unit position, requirements and adjustments	218	138

	Paragraph	Page
Domestic shipment:		
Packaging data	5	7
Unpacking	19	23
DUPLEX SINGLE switch SB	120	102
Trouble analysis	145	114
Emergency operation	55	41
Equipment:		
Connections:		
Ground and power supply	24	29
Line	25	30
Normal operation:		
Duplex make-and-break	27	32
Duplex polar	26	30
Single	28	32
Split operation:		
Duplex make-and-break	30	33
Duplex polar	31	33
Single	32	33
To other equipment	32	33
Drawer:		
Description	3*k*	6
Installation	22*a*	24
Trouble-analysis chart	145	114
Unpacking	18*c*	18
Performance check lists. (*See* Routine checks of performance.)	57–62	42
Export shipment:		
Packaging data	4	6
Unpacking	18	18
Exterior of Teletypewriter Set AN/TGC–1 (or AN/TGC–1A), preventive maintenance	67	54
Feed-out key:		
FO–1 and relay RR1:		
Functioning	103; 109*d*	86, 96
Trouble analysis	139*c*; 145	111, 114
FO–2 and relay RR2:		
Functioning	104; 109*d*	88, 96
Trouble analysis	139*c*; 145	111, 114
Feed-pawl:		
Arm spring tension	195	132
Lever requirements and adjustments	194	132
Spring tension	196	132
Feed-wheel:		
Detent:		
Requirements and adjustments	191	132
Spring tension	193	132
Requirements and adjustments	186	131
Five-unit start-stop teletypewriter code	15	17
Forms	app. I, 8	142
Functioning of Teletypewriter Set AN/TGC–1 (or AN/TGC–1A):		
Detailed:		
A and B transmitting relays	101	84
Break:		
Circuit, relays RBK1 and RBK2	107	94
Key	102	86
Call-in circuit	106	93
Completion of transmission cycle	100	83
Components	108	94
DUPLEX SINGLE switch SB	120	102
Feed-out key:		
FO–1 and relay RR1	103	86
FO–2 and relay RR2	104	88
General	95	77
Locking-out of typing reperforators	105	91

	Paragraph	Page
Functioning of Teletypewriter Set AN/TGC–1—Continued		
Detailed—Continued		
Message transmitter:		
Circuits	99	82
Units (MXD8)	115	97
Monitor (upper) typing reperforator	110	96
Multiple transmitter distributor and base	114; 115; 116; 117	96, 97, 100, 101
NORMAL SPLIT switch SA	119	102
Number transmitter:		
Circuit	98	80
Unit (MXD9)	116	100
OPR. NON-OPR. switches S1 and S2	121	102
POLAR MAKE-BREAK switches S3 and S4	122	103
Power cabinet	118	102
RA, RB, RN, and RNN relays	124	103
RBK1 and RBK2 relays	126	103
Receiving (lower) typing reperforator	112	96
RR1 and RR2 relays	125	103
Signal indicator panel	109	994
Tape winder	111	96
Transmitter circuits	97	79
Sequence of description	96	78
Transmitting and receiving relays	123	103
54A rectifier	113	96
General	14	15
Fuses, preventive maintenance	69	54
Gear guard, requirements and adjustments	217	137
Glossary	app. I, 10	143
Governor:		
Adjusting bracket requirements and adjustments	213	136
Brush spring:		
Plate bracket requirements and adjustments	211	136
Pressure	212	136
Inner and outer disk contact springs	210	135
Shims requirements and adjustments	215	137
Speed-adjusting:		
Lever stop plate	214	137
Wheel friction-washer spring tension	209	135
Ground connections	14*d*; 24*a*; 24*c*	17, 29
I–176, Test Unit	128	103
I–181, Test Set	132	108
I–193–A, Test Set	131	106
Indexes:		
Alphabetical:		
Parts identification illustrations for—		
Multiple transmitter distributor and base	app. II, 2	144
Tape winder, number tape reel, tape shute, spring tape holder, power cabinet, signal indicator panel, and rectifier unit	app. II, 3	141
Numerical:		
Parts identification illustrations for—		
Multiple transmitter distributor and base	app. II, 5	161
Tape winder, number tape reel, tape chute, and spring tape holder	app. II, 6	164
Inner and outer disk contact springs requirements and adjustments	210	135
Inserting message tape	53*b*	40
Installation:		
Ribbon in typing reperforators	37	35
Tape:		
Tape winder	35	34
Typing reperforators	34	34
Teletypewriter Sets AN/TGC–1 and AN/TGC–1A	22	23
Interrupting message traffic	54*c*	41
Jack box, monitor	32	33

	Paragraph	Page
Keys. (*See* Switches and keys.)		
Letters operating lever horizontal extension:		
Requirements and adjustmensts	202	134
Spring tension	203	134
Line:		
Circuits	25*b*	30
Connections	14*d*; 25	17, 30
Terminal strip:		
Connections	25*a*	30
Description	3*j*	5
Local operating test	40	36
Location of equipment	17	18
Locking-out of typing reperforators	105	91
Lubricants, recommended	82	59
Lubrication:		
Charts:		
Multiple transmitter distributor and base	88	63
Teletypewriter Sets AN/TGC–1 and AN–TGC/1A	88	63
Detailed instructions	84; 85	59, 60
Preparation:		
Multiple transmitter distributor	86	61
Base	87	62
Teletypewriter Sets AN/TGC–1 and AN/TGC–1A	85	60
Recommended lubricants	82	59
Schedules	83	59
Main-shaft:		
Bearings alinement	206	135
End play requirements and adjustments	207	135
Maintenance parts	134	109
Message:		
Procedures	54	40
Transmitter circuits	99	82
Models, differences in	1*b*; 159	1, 120
Moistureproofing and fungiproofing	90*a*; 91; 92	70, 71, 75
Monitor jack box	32	33
Motor:		
Gear clearance requirements and adjustments	216	137
Pinion requirements and adjustments	208	135
Multiple transmitter distributor:		
Description	3*g*	7
Installation	22*b*; 22*c*	24
Motor	117	101
Number tape, preparing	39	35
Unpacking	18*c*	18
Multiple transmitter distributor and base:		
Description and functioning	114–117	96
Lubrication:		
Charts	88	63
Preparation	87	62
Parts identification illustrations index:		
Alphabetical	app. II, 2	144
Numerical	app. II, 5	161
Parts necessary to change from 368 opm to 600 opm	159	120
Preventive maintenance	73	55
Repairs	153–155	117
Requirements and adjustments	165–218	124
Trouble-analysis chart	144	113
Multiple transmitter distributor base:		
Description	117	101
Motor, removing from	205	134

	Paragraph	Page
Normal duplex:		
Connections to other equipment	32*a*	33
Make-and-break operation:		
Application	7	7
Line connection	27	32
Setting conditioning switches	45	38
Polar operation:		
Application	8	9
Equipment performance check list	59	43
Line connections	26	30
Setting conditioning switches	44	38
Normal operation:		
A and B transmitting relays	101*a*	84
Break key	102*a*	86
Call-in circuit	106*a*	93
Completion of transmission cycle	100*a*	83
Equipment performance check lists	58; 59; 61	42, 43, 46
Feed-out key:		
FO–1 and relay RR1	103*a*	86
FO–2 and relay RR2	104*a*	88
Locking-out of typing reperforators	105*a*	91
Message transmitter circuits	99*a*	82
Number transmitter circuit	98*a*	80
Starting sequence	42	36
Transmitter circuits	97*a*	79
Normal single operation:		
Application	9	9
Equipment performance check list	61	46
Line connections	28	32
Setting conditioning switches	46	38
Normal split switch SA	119	102
Trouble analysis	145	114
Numbered messages, transmitting	42*a*; 43*a*	36, 37
Number release key	109*a*	94
Trouble analysis	139*a*	110
Number-tab holder:		
Assembly	20*g*	23
Installing number tape in	39*d*	35
Number tape:		
Preparing	39	35
Number-tape reel:		
Assembly	20	23
Description	3*h*	4
Installing number tape on	39*c*	35
Parts identification illustrations index:		
Alphabetical	app. II, 3	147
Numerical	app. II, 6	164
Number transmitter:		
Circuit	98	80
Unit:		
Description	114	96
Functioning	116	100
Operating:		
Checks and adjustments:		
Checking and adjusting motor speed	38	35
Installing:		
Ribbon in typing reperforators	37	35
Tape:		
In typing reperforators	34	34
On tape winder	35	34
Local operating test	40	36
Preoperational equipment adjustments	33	34

	Paragraph	Page
Operating—Continued		
Checks and adjustmeats—Continued		
Preparing number tape	39	35
Setting range finders	36	35
Test, local	40	36
Operation:		
Emergency	55	41
Message procedures	54	40
Preparing and inserting message tapes	53	40
Setting conditioning switches:		
Normal:		
Duplex make-and-break	45	38
Duplex polar	44	38
Single	46	38
Split duplex:		
Make-and-break:		
Circuit No. 1	48	39
Circuit No. 2	51	40
Polar:		
Circuit No. 1	47	39
Circuit No. 2	50	40
Split single:		
Circuit No. 1	49	39
Circuit No. 2	52	40
Starting Teletypewriter Sets AN/TGC–1 and AN/TGC–1A	41	36
Transmitter unit starting sequence:		
Normal operation	42	36
Split operation	43	37
Types	14*e*	17
OPR. NON-OPR. switches S1 and S2	43*c*; 107*b*	37, 94
Functioning	121	102
Trouble analysis	145	114
Other equipment, connections to	32	33
Outline of repair and adjustment procedure	93	77
Packaging and packing instructions, specifications	app. I, 3	141
Packaging data:		
Domestic shipment	5	7
Export shipment	4	6
Parts:		
Identification illustrations for Teletypewriter Set AN/TGC–1	app. II, 4	149
List	app. II, 5	161
Necessary to convert AN/TGC–1 (368 opm) to AN/TGC–1A (600 opm)	159	120
Performance check lists, equipment	57–62	42
Physical checks	21	23
POLAR MAKE-BREAK switches S3 and S4:		
Functioning	122	103
Trouble analysis	145	114
Power	1*h*	2
Cabinet:		
Description	3*l*	6
Functioning	118	102
Parts identification illustrations, alphabetical index	app. II, 3	147
Connections	24*c*	29
Panel, description	3*f*	3
Preoperational adjustments	33	34
Source	14*c*; 24*b*	17, 29
Preoperational equipment adjustments	33	34
Preparing:		
Message tapes	53*a*	40
Number tape	39	35

	Paragraph	Page
Preventive maintenance:		
Capacitors and resistors	74	56
Check list	80; 81	58
Cords, cables, and plugs	68	54
Description of techniques	64	50
Exterior of teletypewriter packaged unit	67	54
Fuses	69	54
Meaning	63	50
Monitoring and receiving typing reperforators	79	58
Multiple transmitter distributor and base	73	55
Rectifier	77	57
Relays	70	54
Schedules	65	51
Switches	78	58
Tape winder	71	55
Motor	72	55
Terminal blocks	75	57
Tools and materials	66	53
Wiring	76	57
Range finders, setting	36	35
Readjustment of 255A type relays	157	119
Receive-send loops	25*b*	30
Receiving messages:		
Normal operation	42*c*	36
Split operation	43*a*; 43*b*	37
Receiving relays	123	103
Records, troubles encountered	56	42
Rectifier 54A	3*e*	3
Assembly	20*h*	23
Connections	24*c*	29
Description	3*e*	3
Functioning	113	96
Installation	22*d*	24
Parts identification illustrations, alphabetical index	app. II, 3	147
Preventive maintenance	77	57
Repairs	152	116
Trouble-analysis chart	143	112
Unpacking	18*c*	18
References:		
Abbreviations, list	app. I, 9	142
Camouflage	app. I, 6	141
Decontamination	app. I, 4	141
Demolition	app. I, 5	141
Forms	app. I, 8	142
Glossary	app I, 10,	143
Packaging and packing instructions	app. I, 3	141
Parts list	app. I, 1	141
Technical manuals on auxiliary equipment and test equipment	app. I, 2	141
Technical publications, other	app. I, 7	141
Relays:		
Assembly	20*i*	23
A transmitting	101; 123	84, 103
B transmitting	101; 102; 123	84, 86, 103
Preventive maintenance	70	54
RA	96; 97; 98; 99; 100; 104*b*; 104*c*; 105; 124	78,79,80,82,83 88, 89, 91, 103,
RB	96; 97; 98; 99; 100; 104*b*; 105; 124	78, 79, 80, 82, 83, 91, 103
RBK1 and RBK2	107; 109; 126	94, 103
RC	106; 109*c*; 126	93, 94, 103
REC-1	103; 105; 106; 109; 121; 122; 123; 125	86, 91, 93, 94, 102, 103

	Paragraph	Page
Relays—Continued		
REC–2	103; 104; 105; 106; 107; 109; 121; 122; 123; 125	86, 88, 91, 93, 94, 102, 103
Repairs	156; 157; 158	118, 119
RN	96; 98; 100; 109*a*; 124	78, 80, 83, 94, 103
RNN	96; 99; 100; 124	78, 82, 83, 103
RR1	103; 109*d*; 125	86, 96, 103
RR2	97*c*; 98*c*; 104; 105; 109; 125	79, 82, 88, 91, 94, 103
Trouble analysis	145	114
Release:		
Bar:		
Contacts, requirements and adjustments	182	130
Latch requirements and adjustments	204	134
Spring tension	183	130
Key	109*e*	96
Normal single operation	104*b*	88
Trouble analysis	139*d*	111
Repacking for shipment	23	28
Repair:		
General:		
Information	146	115
Procedures:		
Outline of repair and adjustment procedure	93	77
Unsatisfactory Equipment Report	94	77
Moistureproofing and fungiproofing after	92	75
Monitor (upper) typing reperforator and motor	14	15
Multiple transmitter distributor and base	153	117
Disassembly	153	117
General	153	117
Reassembly	155	118
Repairing	154	117
Receiving (lower) typing reperforator and motor	151	116
Relays:		
255A type:		
Cleaning and adjusting	156	118
Readjustment	157	119
RA, RB, RR1, RR2, RC, RN, RNN, RBK1, RBK2	158	119
Signal indicator panel	147	116
Tape winder	149	116
Motor unit	150	116
Teletypewriter Set AN/TGC–1 (368 opm) and Teletypewriter Set AN/TGC–1A (600 opm)	159	120
Tools	66; 133	53, 108
54A rectifier	152	116
Requirements and adjustments:		
Armature spring tension	173	127
Clutch	171	127
Spring compression	170	127
Comb-shaft retainers	176	128
Distributor-unit position	218	138
Feed-pawl:		
Arm spring tension	195	132
Lever	194	132
Spring tension	196	132
Feed wheel	186	131
Detent	191	132
Spring tension	193	132
Gear guard	217	137

	Paragraph	Page
Requirements and adjustments—Continued		
Governor:		
Adjusting bracket	213	136
Brush spring:		
Plate bracket	211	136
Pressure	212	136
Shims	215	137
Speed-adjusting wheel friction-washer spring tension	209	135
Inner and outer disk contact springs	210	135
Introduction	161; 165	124
Letters operating-lever horizontal extension	202	134
Spring tension	203	134
Main-shaft:		
Bearings alinement	206	135
End play	207	135
Monitor (upper) typing reperforator	162	124
Motor:		
Gear clearance	216	137
Pinion	208	135
Multiple transmitter distributor and base	165; 168; 205	124, 127, 134
Preparation for checking and adjusting	167	127
Procedures, details of requirements and adjustment	166	124
Receiving (lower) typing reperforator	164	124
Relays:		
Control	220	139
255A type	219	138
Release-bar:		
Contacts	182	130
Latch	204	134
Spring tension	183	130
Selector-lever:		
Bail	187	131
Spring tension	188	132
Comb	184	130
Guide	192	132
Spring tension	189	132
Speed-adjusting lever stop plate	214	137
Stop-magnet bracket	172	127
Tape-lid:		
Horizontal adjustment	199	133
Latch spring	200	133
Tensions	201	133
Pivot screw	197	133
Vertical adjustment	198	133
Tape-out:		
Contact gap	179	129
Contact-lever latch	177	128
Contact-lever latch spring tension	178	129
Contact spring pressure	180	129
Operating-lever spring tension	181	130
Sensing-lever spring tension	190	132
Tape-winder unit	163	124
Top plate	185	131
Transmitting-cam cylinder end play	169	127
Transmitting-contact:		
Gap	174	128
Spring pressure	175	128
Resistors and capacitors, preventive maintenance	74	56
Routine checks of performance:		
Equipment performance check lists:		
Normal:		
Duplex	59	43
Single	61	46

	Paragraph	Page
Routine checks of performance—Continued		
Equipment performance check lists—Continued		
Split:		
Duplex	60	45
Single	62	48
Teletypewriter Set AN/TGC–1 or AN/TGC–1A	58	42
Instructions on use of equipment performance check lists	57	42
Records	56	42
Schedules, lubrication	83	59
Selector-lever:		
Bail	115*b*	97
Extension	115*e*	98
Requirements and adjustments	187	131
Spring tension	188	132
Comb requirements and adjustments	184	130
Guide requirements and adjustments	192	132
Spring tension	189	132
Selector levers	115*c*	97
Send-receive loops	25*b*	30
Sent tapes	43*d*	37
Setting conditioning switches:		
Normal:		
Duplex make-and-break operation	45	38
Duplex polar operation	44	38
Single operation	46	38
Split:		
Duplex make-and-break operation:		
Circuit No. 1	48	39
Circuit No. 2	51	40
Duplex polar:		
Circuit No. 1	47	39
Circuit No. 2	50	40
Single operation:		
Circuit No. 1	49	39
Circuit No. 2	52	40
Setting range finders	36	35
Signal indicator panel:		
Description	3*a*	2
Installation	22*h*	27
Parts identification illustrations, alphabetical index	app II, 3	147
Repairs	147	116
Trouble-analysis chart	139	110
Unpacking	18*c*	18
Signal Supply Catalog pamphlets, Department of the Army	app II, p. 1	144
Signaling code	15	17
Single operation:		
Feed-out key FO–2 and relay RR2	104*b*	88
Locking-out of typing reperforators	105	91
Number transmitter circuit	98*c*	82
Transmitter circuits	97*c*	79
Speed-adjusting lever stop plate requirements and adjustments	214	139
Split duplex:		
Connections to other equipment	32	33
Make-and-break operation:		
Application	10	9
Line connections	30	33
Setting conditioning switches	48; 51	39, 40
Polar operation:		
Application	11	9
Equipment performance check list	60	45
Line connections	29	33
Setting conditioning switches	47; 50	39, 40

	Paragraph	Page
Split operation:		
A and B transmitting relays	101*b*	84
Break key	102*b*	86
Call-in circuit	106*b*	94
Completion of transmission	100*b*	83
Equipment performance check lists	58; 60; 62	42, 45, 48
Feed-out key:		
FO–1 and relay RR1	103*b*	87
FO–2 and relay RR2	104*c*	89
Message transmitter circuits	99*b*	82
Number transmitter circuit	98*b*	80
Starting sequence	43	37
Transmitter circuits	97*b*	79
Split single operation:		
Application	12	15
Equipment performance check list	62	48
Line connections	31	33
Setting conditioning switches	49; 52	39, 40
Spring tape holder:		
Assembly	20*f*	23
Parts identification illustrations index:		
Alphabetical	app II, p. 3	147
Numerical	app II, p. 6	164
Starting Teletypewriter Sets AN/TGC–1 (and AN/TGC–1A)	41	36
Equipment performance check list	58	42
Start-stop cam	115*d*	98
Stop-magnet bracket requirements and adjustments	172	127
Switches and keys (*see also* alphabetical listing by unit name):		
ALARM OFF (Button Out)	42*c*; 109*c*	36, 94
BREAK KEY	46*e*; 54*c*; 54*d*; 109*g*	39, 41, 96
DUPLEX SINGLE	120	102
NO. 1 TAPE FEED-OUT NO. 2	42*c*; 46*c*; 109*d*	36, 38, 96
NORMAL SPLIT	119	102
NUMBER RELEASE	109*a*	94
OPR. NON-OPR	121	102
POLAR MAKE-BREAK	122	103
Preventive maintenance	78	57
RELEASE KEY	46*d*; 54*d*; 109*e*	38, 41, 96
Trouble analysis	139; 145	110, 114
Synchronism	16	17
System application	6	7
Tape:		
Message, preparing and inserting	53	40
Number, preparing	39	35
Procedure for resuming transmission after receiving break signal	46*d*	38
Sent	43*d*	37
Tape winder, installing on	35	34
Typing reperforators, installing in	34	34
Tape bin:		
Assembly	20*j*	23
Installation	22*f*	21
Tape chutes:		
Installation	22*e*; 22*g*	24, 27
Parts identification illustrations index:		
Alphabetical	app II, 3	147
Numerical	app II, 6	164
Tape compartments	3*i*	5
Tape feed out	42*c*; 46*e*	36, 39
Keys FO–1 and FO–2. (*See* Feed-out keys FO–1 and FO–2.)		
Tape guides, assembly	20*k*	23

	Paragraph	Page
Tape lid:		
Hinged	115*h*	100
Horizontal adjustment	199	133
Latch:		
Spring requirements and adjustments	200	133
Spring tension	201	133
Pivot screws requirements and adjustments	197	133
Vertical adjustment	198	133
Tape-out:		
Contact:		
Gap requirements and adjustments	179	129
Lever latch:		
Requirements and adjustments	177	128
Spring tension	178	129
Spring pressure	180	129
Contacts	97; 100	79, 83
Functioning	115*g*; 116*b*	98, 100
Operating lever spring tension	181	130
Sensing-lever spring tension	190	132
Tape-reel:		
Clutch spring tension	163*d*	124
Shaft:		
Gear requirements and adjustments	163*c*	124
Requirements and adjustments	163*b*	124
Tape winder:		
Assembly	20*d*	23
Description	3*c*	3
Functioning	111	96
Installation	22*g*	27
Lubrication:		
Chart	88*a*	63
Preparation for	85*b*	60
Motor:		
Lubrication:		
Chart	88*b*	64
Preparation for	85*c*	61
Mounting bracket requirements and adjustments	163*a*	124
Preventive maintenance	72	55
Repairs	150	116
Trouble analysis	141	112
Parts identification illustrations index:		
Alphabetical	app II, 3	147
Numerical	app II, 6	164
Preventive maintenance	71	55
Repairs	149	116
Requirements and adjustments	163	124
Tape, installing on	35	34
Trouble-analysis chart	141	112
Unpacking	18*c*	18
Technical manuals on auxiliary and test equipment	app I, 2	141
Technical publications, other	app I, 7	141
Teletypewriter code, five-unit start-stop	15	17
Teletypewriter Set AN/TGC–1 (or AN/TGC–1A):		
Application	6–16	7
Assembly, installation, and disassembly	17–23	18
Description	1–5	1
Equipment connections	24–32	29
Functioning	95–126	77
Lubrication	82–88	59
Operating checks and adjustments	33–40	34
Operation	41–55	36
Parts identification lists	app II, 1–7	144

	Paragraph	Page
Teletypewriter Set—Continued		
Preventive maintenance	63–79	50
References	app I, 1–10	141
Repair	146–160	115
Requirements and adjustments	161–220	124
Routine checks of performance	56–62	42
Test equipment	127–134	103
Trouble shooting	135–145	109
Weatherproofing	89–92	70
Teletypewriter Set AN/TGC–1 (368.1 opm) and Teletypewriter Set AN/TGC–1A (600 opm)	159	120
Terminal blocks:		
LRS1 and LRS2	24*c*	29
Preventive maintenance	75	57
Transmitter distributor	117*b*	101
Terminal strip, line:		
Connections	25*a*	30
Description	3*j*	5
Test, local operating	40	36
Test equipment:		
Additional tools	133	108
Distortion Test Set TS–383/GG	130	106
Maintenance parts for Teletypewriter Set AN/TGC–1	134	109
Technical manuals	app I, 2	141
Test Set:		
I–181	132	108
I–193–A	131	106
TS–2/TG	129	103
Test sets	127	103
Test Unit I–176	128	103
Tool Equipment TE–50	66	53
Tools, additional	133	108
Top plate requirements and adjustments	185	131
Transmission:		
Cycle, completion	100	83
Resuming after interruption by break signal	46*d*; 54*d*	38, 41
Transmitter circuits	97	79
A and B transmitting relays	101	84
Completion of transmission cycle	100	83
Message transmitter	99	82
Number transmitter	98	80
Sequence of description of	96	78
Transmitter start lever MB	97; 115*g*	79, 98
Trouble analysis	148	116
Transmitter unis:		
Functioning:		
Message unit	115	97
Number unit	116	100
Lubrication chart	88*d*	66
Transmitting-cam cylinder	115*a*	97
End play requirements and adjustments	169	127
Transmitting-contact:		
Gap requirements and adjustments	174	128
Spring pressure	175	128
Transmitting relays	101; 123	84, 103
Trouble shooting:		
Introduction	135	109
Localization of electrical trouble	138	110
Trouble analysis	137	110
Charts:		
Equipment drawer	145	114
Monitor (upper) typing reperforator	140	111
Multiple transmitter distributor and base	144	113

	Paragraph	Page
Trouble shooting—Continued		
Trouble analysis—Continued		
Charts—Continued		
Receiving (lower) typing reperforator	142	112
Signal indicator panel	139	110
Tape winder	141	112
54A rectifier	143	112
Trouble detected by inspection	136	110
Types of operation	14*e*	17
Typical comcenter lay-out	13	15
Typing reperforators:		
Description	3*b*; 3*d*	2, 3
Installation	22*d*; 22*e*; 22*g*	24, 27
Installing:		
Ribbon	37	35
Tape	34	34
Locking-out of	105	91
Parts necessary to change from 368 opm to 600 opm	159	120
Tape feed-out circuits	103; 104; 109*d*	86, 88, 94
Unpacking	18*c*	18
255A type relays:		
Cleaning and adjusting	156	118
Readjustment	157	119
Requirements and adjustments	219	138
Unnumbered messages, transmitting operation sequence:		
Normal operation	42*b*	36
Split operation	43*b*	37
Unpacking shipping containers:		
Domestic	19	23
Oversea	18	18
Unsatisfactory Equipment Report	94	77
Weatherproofing:		
General	89	70
Moistureproofing and fungiproofing:		
After repairs	92	75
General	90	70
Teletypewriter Sets AN/TGC–1 and AN/TGC–1A	91	71
Weights:		
Main components	2	2
Packed shipping boxes:		
Main components	4	6
Spare parts	18	18
Wiring, preventive maintenance	76	57

823667—49——15

8TH COMM. GROUP SCHOOL